# Timing Belt Replacement Recommendations

| Make/ Model Year | Engine | Belt Part No. | Recommended Replacement (Miles) |
|---|---|---|---|
| **ACURA** | | | |
| **Passenger Cars** | | | |
| **EL (Canadian)** | | | |
| 1997-00 | *1.6L 4-Cyl. | T224 | 105,000 |
| **Integra** | | | |
| 1986-89 | *1.6L 4-Cyl. | T130 | 60,000[1] |
| 1992-93 | *1.7L 4-Cyl. | T227 | 90,000 |
| 1990-94 | *1.8L 4-Cyl. (Exc. VTEC) | T184 | 90,000 |
| 1995-96 | *1.8L 4-Cyl. (Exc. VTEC) | T184 | 90,000 Normal<br>60,000 Severe |
| 1997-01 | *1.8L 4-Cyl. (Exc. VTEC) | T184 | 105,000 |
| 1991-94 | *1.8L 4-Cyl. (VTEC) | T247 | 90,000 |
| 1995-96 | *1.8L 4-Cyl. (VTEC) | T247 | 90,000 Normal<br>60,000 Severe |
| 1997-01 | *1.8L 4-Cyl. (VTEC) | T247 | 105,000 |
| **Legend** | | | |
| 1986-87 | *2.5L V6 | T129 | 60,000[1] |
| 1988-89 | *2.7L V6 | T129 | 60,000[1] |
| 1990 | *2.7L V6 | T129 | 90,000 |
| 1991-94 | *3.2L V6 (C32A1) | T193 | 90,000 |
| 1995 | *3.2L V6 (C32A1) | T193 | 90,000 Normal |
| **MDX** | | | |
| 2001 | *3.5L V6 (J35A3) | T286 | 105,000 |
| **Vigor** | | | |
| 1992-94 | *2.5L 5-Cyl. | T211 | 90,000 |
| **2.2CL** | | | |
| 1997 | *2.2L 4-Cyl. | | |
| | *Balance Shaft | T186 | 90,000 Normal[2]<br>60,000 Severe |
| | *Camshaft | T244 | 90,000 Normal[2]<br>60,000 Severe |
| **2.3CL** | | | |
| 1999-98 | *2.3L 4-Cyl. | | |
| | *Balance Shaft | T186 | 105,000 |
| | *Camshaft | T244 | 105,000 |
| **2.5TL** | | | |
| 1995-96 | *2.5L 5-Cyl. | T211 | 90,000 Normal<br>60,000 Severe |
| 1997-98 | *2.5L 5-Cyl. | T211 | 105,000 |
| **3.0CL** | | | |
| 1997-99 | *3.0L V6 (J30A1) | T286 | 105,000 |
| **3.2CL** | | | |
| 2001 | *3.2L V6 (J32A1/A2) | T286 | 105,000 |
| **3.2TL** | | | |
| 1996 | *3.2L V6 (C32A6) | T193 | 90,000 Normal<br>60,000 Severe |
| 1997-98 | *3.2L V6 (C32A6) | T193 | 105,000 |
| 1999-01 | *3.2L V6 (J32A1) | T286 | 105,000 |
| **3.5RL** | | | |
| 1996 | *3.5L V6 (C35A1) | | |
| | *Balance Shaft | T280 | 90,000 Normal[2]<br>60,000 Severe |
| | *Camshaft | T279 | 90,000 Normal[2]<br>60,000 Severe |
| 1997-01 | *3.5L V6 | | |
| | *Balance Shaft | T280 | 105,000 |
| | *Camshaft | T279 | 105,000 |
| **Light Trucks** | | | |
| **SLX** | | | |
| 1996-97 | 3.2L V6 (SOHC) | T221 | 60,000 |
| 1999-98 | 3.5L V6 (DOHC) | T303 | 75,000 |
| **ALFA ROMEO** | | | |
| **164L, LS & S** | | | |
| 1991-93 | 3.0L V6 | T120 | 50,000 |
| **AMERICAN MOTORS** | | | |
| **Concord** | | | |
| 1978-79 | 2.0L 4-Cyl. | T017[3] | 60,000[1] |
| **Gremlin** | | | |
| 1977-78 | 2.0L 4-Cyl. | T017[3] | 60,000[1] |
| **Spirit** | | | |
| 1979 | 2.0L 4-Cyl. | T017[3] | 60,000[1] |
| **ASUNA** | | | |
| **Passenger Cars** | | | |
| **Sunfire (Canadian)** | | | |
| 1993 | 1.8L 4-Cyl. | T205 | 60,000 |
| **Light Trucks** | | | |
| **Sunrunner (Canadian)** | | | |
| 1989-95 | 1.6L 4-Cyl. (8-Valve) | | |
| | California | T212 | 60,000 |
| | Except California | T164 | 60,000 |
| 1994-98 | 1.6L 4-Cyl. (16-Valve) | | |
| | California | T212 | 60,000 |
| | Except California | T164 | 60,000 |
| 1999-01 | 1.6L 4-Cyl. (16-Valve) | T212 | 60,000 |
| **AUDI** | | | |
| **Allroad** | | | |
| 2000 | *2.7L V6 DOHC | T297 | 105,000 |
| **A4** | | | |
| 1997-99 | *1.8L 4-Cyl. Turbo | T291 | 90,000 |
| 1996 | *2.8L V6, 12-Valve | T218 | 60,000[1] |
| 1997 | *2.8L V6, 12-Valve | T218 | 90,000 |
| 1998 | *2.8L V6, 30-Valve | T297 | 90,000 |
| 1999 | *2.8L V6, 30-Valve | T297 | 75,000 |
| **A4 Quattro** | | | |
| 1997-99 | *1.8L 4-Cyl. Turbo | T291 | 90,000 |
| 1996 | *2.8L V6, 12-Valve | T218 | 60,000[1] |
| 1997 | *2.8L V6, 12-Valve | T218 | 90,000 |
| 1998 | *2.8L V6, 30-Valve | T297 | 90,000 |
| 1999 | *2.8L V6, 30-Valve | T297 | 75,000 |
| 2000 | *2.7L V6 DOHC | T297 | 105,000 |
| **A6** | | | |
| 1995-96 | *2.8L V6, 12-Valve | T218 | 60,000[1] |
| 1997 | *2.8L V6, 12-Valve | T218 | 90,000 |
| 1998 | *2.8L V6, 30-Valve | T297 | 90,000 |
| 1999 | *2.8L V6, 30-Valve | T297 | 75,000 |
| 2000 | *2.8L V6, 30-Valve | T297 | 105,000 |
| **A6 Quattro & Quattro Turbo** | | | |
| 1995-96 | *2.8L V6, 12-Valve | T218 | 60,000[1] |
| 1997 | *2.8L V6, 12-Valve | T218 | 90,000 |
| 1998 | *2.8L V6, 30-Valve | T297 | 90,000 |
| 1999 | *2.8L V6, 30-Valve | T297 | 75,000 |
| 2000 | *2.8L V6, 30-Valve | T297 | 105,000 |
| **A8** | | | |
| 1997-98 | *3.7L V8 (AEW) | T207 | 90,000 |
| 1999 | *3.7L V8 (AEW) | T207 | 75,000 |
| **A8 Quattro** | | | |
| 1997-98 | *3.7L V8 (AEW) | T207 | 90,000 |
| 1999 | *3.7L V8 (AEW) | T207 | 75,000 |
| 2000 | *4.2L V8 (AKB, AUX & AYS) | T297 | 105,000 |
| **Cabriolet** | | | |
| 1994-96 | *2.8L V6, 12-Valve | T218 | 60,000[1] |
| 1997-98 | *2.8L V6, 12-Valve | T218 | 90,000 |
| **Coupe** | | | |
| 1981-83 | 2.2L 5-Cyl. | T065 | 60,000[1] |
| 1984-85 | 2.2L 5-Cyl. | | |
| | 113 Tooth Belt | T065 | 60,000[1] |
| | 120 Tooth Belt | T127 | 60,000[1] |

* - Interference Engine. Other interference engine applications may exist which are not listed here. See page 19 for interference engine cautions.

[1] - Although the vehicle manufacturer does not recommend a specific scheduled maintenance interval, belt manufacturers suggest the belt be replaced at 60,000 miles intervals.

[2] - The vehicle manufacturer recommends replacing all belts at the same time.

[3] - A timing belt component kit is available for this application.

# Timing Belt Replacement Recommendations

| Make/ Model Year | Engine | Belt Part No. | Recommended Replacement (Miles) |
|---|---|---|---|
| **AUDI (Cont.)** | | | |
| **Coupe GT** | | | |
| 1986-87 | 2.2L 5-Cyl. | T127 | 60,000[1] |
| **Coupe Quattro** | | | |
| 1990-91 | 2.3L 5-Cyl. | T197 | 60,000[1] |
| **Fox** | | | |
| 1973-79 | 1.6L 4-Cyl | T017[3] | 60,000[1] |
| **Quattro** | | | |
| 1983 | 2.2L 5-Cyl. | T065 | 60,000[1] |
| 1984-85 | 2.2L 5-Cyl. | | |
| | 113 Tooth Belt | T065 | 60,000[1] |
| | 120 Tooth Belt | T127 | 60,000[1] |
| **S4 Quattro** | | | |
| 2001 | *2.7L V6 DOHC | T297 | 105,000 |
| **S4 Sedan** | | | |
| 1992-94 | 2.2L 5-Cyl. Turbo | T225 | 60,000[1] |
| **S6** | | | |
| 1995 | 2.2L 5-Cyl. Turbo | T225 | 60,000[1] |
| **S6 Quattro** | | | |
| 1995 | 2.2L 5-Cyl. Turbo | T225 | 60,000[1] |
| **TT Coupe & Roadster** | | | |
| | *1.8L 4-Cyl. Turbo | T306 | 120,000 |
| **V8 Quattro** | | | |
| 1990-91 | 3.6L V8 (PT Engine) | T207 | 60,000 |
| 1992-94 | 4.2L V8 (ABH Engine) | T207 | 90,000 |
| **80** | | | |
| 1988-90 | 2.0L 4-Cyl. | T017[3] | 60,000[1] |
| 1991-92 | 2.3L 5-Cyl. | T170 | 60,000[1] |
| **80 Quattro** | | | |
| 1988 | 2.3L 5-Cyl. | T127 | 60,000[1] |
| **90** | | | |
| 1988-90 | 2.0L 4-Cyl. | T017[3] | 60,000[1] |
| 1988 | 2.3L 5-Cyl. | T127 | 60,000[1] |
| 1989 | 2.3L 5-Cyl. | | |
| | Up To Chas. 89J396702 | T127 | 60,000[1] |
| | From Chas. 89J396703 | T170 | 60,000[1] |
| 1990-91 | 2.3L 5-Cyl. | T170 | 60,000[1] |
| 1993-95 | *2.8L V6, 12-Valve | T218 | 60,000[1] |
| **90 Quattro** | | | |
| 1988 | 2.3L 5-Cyl. | T127 | 60,000[1] |
| 1989 | 2.3L 5-Cyl. | | |
| | Up To Chas. 89J394742 | T127 | 60,000[1] |
| | From Chas. 89J394743 | T170 | 60,000[1] |
| 1990-92 | 2.3L 5-Cyl. | T170 | 60,000[1] |
| 1993-95 | *2.8L V6 (12-Valve) | T218 | 60,000[1] |
| **100** | | | |
| | 2.3L 5-Cyl. | | |
| | Thru Chas. 063969 | T127 | 60,000[1] |
| | From Chas. 063970 | T170 | 60,000[1] |
| 1990-91 | 2.3L 5-Cyl. | T170 | 60,000[1] |
| 1992-94 | *2.8L V6 (12-Valve) | T218 | 60,000[1] |
| **100 Quattro** | | | |
| 1988-91 | 2.3L 5-Cyl. | | |
| | Thru Chas. 063969 | T127 | 60,000[1] |
| | From Chas. 063970 | T170 | 60,000[1] |
| 1990-91 | 2.3L 5-Cyl. | T170 | 60,000[1] |
| 1992-94 | *2.8L V6 (12-Valve) | T218 | 60,000[1] |
| **200** | | | |
| 1989 | 2.2L 5-Cyl. | | |
| | Up To Chas. 44K400000 | T127 | 60,000[1] |
| 1989 | 2.2L 5-Cyl. | | |
| | From Chas. 44K400001 | T170 | 60,000[1] |
| 1990-91 | 2.2L 5-Cyl. | T170 | 60,000[1] |
| **AUDI (Cont.)** | | | |
| **200 Quattro** | | | |
| 1989 | 2.2L 5-Cyl. | | |
| | Thru Chas. 44K004457 | T127 | 60,000[1] |
| | From Chas. 44K004458 | T170 | 60,000[1] |
| 1990-91 | 2.2L 5-Cyl. | T170 | 60,000[1] |
| **4000** | | | |
| 1980-83 | 1.7L 4-Cyl. | T017[3] | 60,000[1] |
| 1982-83 | 1.6L 4-Cyl. Diesel | T043 | 60,000[1] |
| 1980-81 | 2.2L 5-Cyl. | T065 | 60,000[1] |
| **4000CS** | | | |
| 1986-87 | 2.2L 5-Cyl. | T127 | 60,000[1] |
| **4000CS Quattro** | | | |
| 1987 | 2.2L 5-Cyl. | T127 | 60,000[1] |
| **4000S** | | | |
| 1984-87 | *1.8L 4-Cyl. | T017[3] | 60,000[1] |
| **4000S Quattro** | | | |
| 1984-85 | 2.2L 5-Cyl. | | |
| | 113 Tooth Belt | T065 | 60,000[1] |
| | 120 Tooth Belt | T127 | 60,000[1] |
| 1986 | 2.2L 5-Cyl. | T127 | 60,000[1] |
| **5000** | | | |
| 1979-83 | 2.0L 5-Cyl. Diesel | | |
| | *Camshaft | T083 | 60,000[1,2] |
| | *Injection Pump | T082 | 60,000[1,2] |
| 1979-83 | 2.0L 5-Cyl.Turbo Diesel | | |
| | *Camshaft | T083 | 60,000[1,2] |
| | *Injection Pump | T082 | 60,000[1,2] |
| 1978-83 | 2.2L 5-Cyl. Turbo | T065 | 60,000[1] |
| **5000 Quattro** | | | |
| 1988 | 2.3L 5-Cyl. | T127 | 60,000[1] |
| **5000CS Quattro** | | | |
| 1987-88 | 2.2L 5-Cyl. | T127 | 60,000[1] |
| **5000S** | | | |
| 1987-88 | 2.3L 5-Cyl. | T127 | 60,000[1] |
| 1984-85 | 2.2L 5-Cyl. | | |
| | 113 Tooth Belt | T065 | 60,000[1] |
| | 120 Tooth Belt | T127 | 60,000[1] |
| 1986-87 | 2.2L 5-Cyl. | T127 | 60,000[1] |
| **BMW** | | | |
| **325 Series** | | | |
| 1987-88 | 2.5L 6-Cyl. | | |
| | *127 Tooth Belt | T131 | 60,000 |
| | *128 Tooth Belt | T106 | 60,000 |
| 1989-91 | *2.5L 6-Cyl. | T131 | 60,000 |
| 1984-88 | 2.7L 6-Cyl. | | |
| | *127 Tooth Belt | T131 | 60,000 |
| | *128 Tooth Belt | T106 | 60,000 |
| **525i** | | | |
| 1989-95 | *2.5L 6-Cyl. | T131 | 60,000 |
| **528e** | | | |
| 1982-88 | 2.7L 6-Cyl. | | |
| | *127 Tooth Belt | T131 | 60,000 |
| | *128 Tooth Belt | T106 | 60,000 |
| **BUICK** | | | |
| **Skyhawk** | | | |
| 1982-86 | 1.8L 4-Cyl. | T081 | 60,000[1] |
| 1987-88 | 2.0L 4-Cyl. | T081 | 60,000[1] |
| **CADILLAC** | | | |
| **Catera** | | | |
| 1997-01 | *3.0L V6 (DOHC) | T285 | 100,000 |

* - Interference Engine. Other interference engine applications may exist which are not listed here. See page 19 for interference engine cautions.

[1] - Although the vehicle manufacturer does not recommend a specific scheduled maintenance interval, belt manufacturers suggest the belt be replaced at 60,000 miles intervals.

[2] - The vehicle manufacturer recommends replacing all belts at the same time.

[3] - A timing belt component kit is available for this application.

# Timing Belt Replacement Recommendations

| Make/ Model Year | Engine | Belt Part No. | Recommended Replacement (Miles) |
|---|---|---|---|
| **CHEVROLET** | | | |
| **Passenger Cars** | | | |
| **Chevette** | | | |
| 1976 | 1.4L 4-Cyl. | T037 | 60,000[1] |
| 1977 | 1.4L 4-Cyl. | T039 | 60,000[1] |
| 1976 | 1.6L 4-Cyl. | T037 | 60,000[1] |
| 1977-78 | 1.6L 4-Cyl. | T039 | 60,000[1] |
| 1979-87 | 1.6L 4-Cyl. | T061 | 60,000[1] |
| 1981-86 | *1.8L 4-Cyl. Diesel | T076 | 60,000[1] |
| **Lumina (Exc. Van)** | | | |
| 1991-95 | *3.4L V6 | T192 | 60,000 |
| 1996-97 | *3.4L V6 | T273 | 60,000 |
| **Metro** | | | |
| 1998-01 | 1.0L 3-Cyl. | T194[3] | 100,000 |
| 1998-01 | 1.3L 4-Cyl. | T194[3] | 100,000 |
| **Monte Carlo** | | | |
| 1995 | *3.4L V6 | T192 | 60,000 |
| 1996-97 | *3.4L V6 | T273 | 60,000 |
| **Nova** | | | |
| 1988 | 1.6L 4-Cyl. (DOHC) | T112 | 60,000[1] |
| 1985-88 | 1.6L 4-Cyl. (SOHC) | T070[3] | 60,000[1] |
| **Spectrum** | | | |
| 1985-87 | 1.5L 4-Cyl | | |
| | *Up To 4/30/87 | T118 | 60,000 |
| | *From 5/1/87 | T162 | 60,000 |
| 1988-89 | *1.5L 4-Cyl. | T162 | 60,000 |
| **Sprint** | | | |
| 1985-88 | 1.0L 3-Cyl. | T095 | 60,000 |
| 1989-91 | 1.0L 3-Cyl. | T166 | 60,000 |
| **CHEVROLET/G.M.C.** | | | |
| **Light Trucks** | | | |
| **LUV** | | | |
| 1981-82 | *2.2L 4-Cyl. Diesel | T075 | 60,000 |
| **S10 & S15 Pickups** | | | |
| 1983-85 | *2.2L 4-Cyl. Diesel | T075 | 60,000 |
| **Tracker** | | | |
| 1998 | 1.6L 4-Cyl. (16-Valve) | | |
| | California | T212 | 60,000 |
| | Except California | T164 | 60,000 |
| 1999-01 | 1.6L 4-Cyl. (16-Valve) | T212 | 60,000 |
| **CHRYSLER** | | | |
| **Cirrus** | | | |
| 2000 | *2.0L 4-Cyl. (SOHC, VIN C) | T245 | 100,000 Federal 105,000 California |
| 1995-99 | 2.4L 4-Cyl. (DOHC, VIN X) | T265 | 105,000 |
| 2000 | 2.4L 4-Cyl. (DOHC, VIN X) | T265 | 100,000 Federal 105,000 California |
| 1995-00 | *2.5L V6 | T259 | 60,000 |
| **Concorde** | | | |
| 1998-99 | *3.2L V6 | T295 | 105,000 |
| 2000 | *3.2L V6 | T295 | 100,000 Federal 105,000 California |
| 1993-94 | 3.5L V6 | T219 | 105,000 |
| 1995-97 | 3.5L V6 | T255 | 105,000 |
| 2000 | 3.5LV6 | T295 | 100,000 Federal 105,000 California |
| **E Class** | | | |
| 1983-84 | 2.2L 4-Cyl. | T071[3] | 60,000[1] |
| **Executive Limo (Canadian)** | | | |
| 1986 | 2.2L 4-Cyl. | T071[3] | 60,000[1] |
| **CHRYSLER (Cont.)** | | | |
| **Intrepid (Canadian)** | | | |
| 1998-99 | *3.2L V6 | T295 | 105,000 |
| 2000 | *3.2L V6 | T295 | 100,000 Federal 105,000 California |
| 1993-94 | 3.5L V6 | T219 | 105,000 |
| 1995-97 | 3.5L V6 | T255 | 105,000 |
| **Laser** | | | |
| 1984-86 | 2.2L 4-Cyl. | T071[3] | 60,000[1] |
| 1986 | 2.5L 4-Cyl. | T114 | 60,000[1] |
| **LeBaron & LeBaron GTS** | | | |
| 1982-88 | 2.2L 4-Cyl. | T071[3] | 60,000[1] |
| 1989-90 | 2.2L 4-Cyl. | T153[3] | 60,000[1] |
| 1986-87 | 2.5L 4-Cyl. | T114 | 60,000[1] |
| 1988 | 2.5L 4-Cyl. | T132 | 60,000[1] |
| 1989-94 | 2.5L 4-Cyl. | T153[3] | 60,000[1] |
| 1990-93 | 3.0L V6 (SOHC) | T139[3] | 60,000 |
| 1994-95 | 3.0L V6 (SOHC) | T139[3] | 60,000[1] |
| **LHS** | | | |
| 1994 | 3.5L V6 | T219 | 105,000 |
| 1995-97 | 3.5L V6 | T255 | 105,000 |
| 1998-99 | 3.5LV6 | T295 | 105,000 |
| 2000 | 3.5LV6 | T295 | 100,000 Federal 105,000 California |
| **New Yorker** | | | |
| 1983-88 | 2.2L 4-Cyl. | T071[3] | 60,000[1] |
| 1986-87 | 2.5L 4-Cyl. | T114 | 60,000[1] |
| 1988 | 2.5L 4-Cyl. | T132 | 60,000[1] |
| 1988-89 | 3.0L V6 (SOHC) | T139[3] | 60,000 |
| 1993-94 | 3.5L V6 | T219 | 105,000 |
| 1995-96 | 3.5L V6 | T255 | 105,000 |
| **Sebring Coupe** | | | |
| 1995-99 | *2.0L 4-Cyl. (DOHC, VIN Y) | T246 | 60,000 |
| 1995-00 | *2.5L V6 | T259 | 60,000 |
| **Sebring Convertible** | | | |
| 1996-99 | 2.4L 4-Cyl. (DOHC, VIN X) | T265 | 105,000 |
| 1997-00 | *2.5L V6 | T259 | 60,000 |
| **TC** | | | |
| 1990 | 2.2L 4-Cyl. (DOHC, VIN R) | T153[3] | 60,000[1] |
| 1990-91 | 3.0L V6 (SOHC) | T139[3] | 60,000 |
| **Town & Country** | | | |
| 1982-88 | 2.2L 4-Cyl. | T071[3] | 60,000[1] |
| 1986-87 | 2.5L 4-Cyl. | T114 | 60,000[1] |
| 1988 | 2.5L 4-Cyl. | T132 | 60,000[1] |
| **300M** | | | |
| 1998-99 | 3.5LV6 | T295 | 105,000 |
| 2000 | 3.5LV6 | T295 | 100,000 Federal 105,000 California |
| **DAEWOO** | | | |
| **Leganza** | | | |
| 1999-01 | | | |
| | *2.2L 4-Cyl. (DOHC) | T305 | 72,000 Federal 102,000 Federal |
| **Lanos** | | | |
| 1999-01 | *1.6L 4-Cyl. (DOHC) | T310 | 60,000 Federal 102,000 Federal |
| **Nubira** | | | |
| 1999-01 | *2.0L 4-Cyl. (DOHC) | T309 | 72,000 Federal 102,000 Federal |
| **Optima (Canadian)** | | | |
| 1988-91 | 1.6L 4-Cyl. | T081 | 60,000[1] |
| 1988-89 | 2.0L 4-Cyl. | T081 | 60,000[1] |
| 1990-91 | 2.0L 4-Cyl. | T163[3] | 60,000[1] |

* - Interference Engine. Other interference engine applications may exist which are not listed here. See page 19 for interference engine cautions.

[1] - Although the vehicle manufacturer does not recommend a specific scheduled maintenance interval, belt manufacturers suggest the belt be replaced at 60,000 miles intervals.

[2] - The vehicle manufacturer recommends replacing all belts at the same time.

[3] - A timing belt component kit is available for this application.

# Timing Belt Replacement Recommendations

| Make/ Model Year | Engine | Belt Part No. | Recommended Replacement (Miles) |
|---|---|---|---|
| **DAIHATSU** | | | |
| **Passenger Cars** | | | |
| **Charade** | | | |
| 1988-92 | *1.0L 3-Cyl. | T178 | 60,000 |
| 1988-92 | *1.3L 4-Cyl. | T181 | 60,000 |
| **Light Trucks** | | | |
| **Rocky** | | | |
| 1990-92 | *1.6L 4-Cyl. | T182 | 60,000 |
| **DATSUN (SEE NISSAN)** | | | |
| **DODGE** | | | |
| **Passenger Cars** | | | |
| **Aries** | | | |
| 1981-88 | 2.2L 4-Cyl. | T071[3] | 60,000[1] |
| 1989 | 2.2L 4-Cyl. | T153[3] | 60,000[1] |
| 1986-87 | 2.5L 4-Cyl. | T114 | 60,000[1] |
| 1988 | 2.5L 4-Cyl. | T132 | 60,000[1] |
| 1989 | 2.5L 4-Cyl. | T153[3] | 60,000[1] |
| **Avenger** | | | |
| 1995-99 | *2.0L 4-Cyl. (DOHC, VIN Y) | T246 | 60,000 |
| 1995-00 | *2.5L V6 | T259 | 60,000 |
| **Challenger** | | | |
| 1978-79 (RWD) | 1.6L 4-Cyl. w/o Bal. Shaft | T064 | 60,000 |
| 1978-79 | 1.6L 4-Cyl. | | |
| | Balance Shaft | T062 | 60,000[2] |
| | Camshaft | T013 | 60,000[2] |
| **Charger** | | | |
| 1983 | 1.7L 4-Cyl | T017[3] | 60,000[1] |
| 1983-87 | 2.2L 4-Cyl. | T071[3] | 60,000[1] |
| **Colt** | | | |
| 1979-84 | *1.4L 4-Cyl. | T073 | 60,000 |
| 1985-86 | *1.5L 4-Cyl. | T073 | 60,000 |
| 1987-90 | *1.5L 4-Cyl. | T128[3] | 60,000 |
| 1991-94 | 1.5L 4-Cyl. | T191[3] | 60,000 |
| 1978-79 (RWD) | 1.6L 4-Cyl. w/o Bal. Shaft | T064 | 60,000 |
| 1979-82 (FWD) | 1.6L 4-Cyl. w/o Bal. Shaft | T064 | 60,000 |
| 1983-89 | 1.6L 4-Cyl. w/o Bal. Shaft | T093 | 60,000 |
| 1977-80 | 1.6L 4-Cyl. | | |
| | Balance Shaft | T062 | 60,000[2] |
| | Camshaft | T013 | 60,000[2] |
| 1989-90 | *1.6L 4-Cyl. (DOHC) | T165 | 60,000 |
| 1989-90 | 1.8L 4-Cyl. (VIN T) | T093 | 60,000 |
| 1992-94 | 1.8L 4-Cyl. (VINs C & D) | T201 | 60,000 |
| **Colt (Canadian)** | | | |
| 1985-86 | *1.5L 4-Cyl. | T073 | 60,000 |
| 1989-91 | *1.5L 4-Cyl. | T128[3] | 60,000 |
| 1992 & 1995 | 1.5L 4-Cyl. | T191[3] | 60,000 |
| **Colt Vista (Includes Canadian)** | | | |
| 1992-94 | 1.8L 4-Cyl. (VINs C & D) | T201 | 60,000 |
| 1984-86 | 2.0L 4-Cyl. (SOHC) | | |
| | Balance Shaft | T090 | 60,000[2] |
| | Camshaft | T089 | 60,000[2] |
| 1987-91 | 2.0L 4-Cyl. (SOHC) | | |
| | Balance Shaft | T159[3] | 60,000[2] |
| | Camshaft | T158[3] | 60,000[2] |
| 1992 | 2.4L 4-Cyl. | | |
| | Balance Shaft | T159 | 60,000[2] |
| | Camshaft | T204 | 60,000[2] |
| 1993 | 2.4L 4-Cyl. | | |
| | Balance Shaft | T159 | 60,000[2] |
| | Camshaft | T230 | 60,000[2] |
| 1994 | 2.4L 4-Cyl. | | |
| | Balance Shaft | T168 | 60,000[2] |
| | Camshaft | T230 | 60,000[2] |
| **DODGE (Cont.)** | | | |
| **Colt Wagon (Includes Canadian)** | | | |
| 1989-90 | 1.8L 4-Cyl. (VIN T) | T093 | 60,000 |
| 1992 | 2.4L 4-Cyl. | | |
| | Balance Shaft | T159 | 60,000[2] |
| | Camshaft | T204 | 60,000[2] |
| 1993 | 2.4L 4-Cyl. | | |
| | Balance Shaft | T159 | 60,000[2] |
| | Camshaft | T230 | 60,000[2] |
| 1994 | 2.4L 4-Cyl. | | |
| | Balance Shaft | T168 | 60,000[2] |
| | Camshaft | T230 | 60,000[2] |
| **Colt 100 (Canadian)** | | | |
| 1989-90 | *1.6L 4-Cyl. (DOHC) | T165 | 60,000 |
| **Colt 200 (Canadian)** | | | |
| 1989-90 | *1.6L 4-Cyl. (DOHC) | T165 | 60,000 |
| **Daytona & Daytona Shelby** | | | |
| 1984-88 | 2.2L 4-Cyl. | T071[3] | 60,000[1] |
| 1989-93 | 2.2L 4-Cyl. | T153[3] | 60,000[1] |
| 1992-93 | 2.2L 4-Cyl. (DOHC, VIN A) | T206 | 60,000[1] |
| 1986-87 | 2.5L 4-Cyl. | T114 | 60,000[1] |
| 1988 | 2.5L 4-Cyl. | T132 | 60,000[1] |
| 1989-93 | 2.5L 4-Cyl. | T153[3] | 60,000[1] |
| 1990-93 | 3.0L V6 (SOHC) | T139[3] | 60,000 |
| **Dynasty** | | | |
| 1989-93 | 2.5L 4-Cyl. | T153[3] | 60,000[1] |
| 1988-93 | 3.0L V6 (SOHC) | T139[3] | 60,000 |
| **Expo (Canadian)** | | | |
| 1987-88 | 2.2L 4-Cyl. | T071[3] | 60,000[1] |
| 1989 | 2.2L 4-Cyl. | T153[3] | 60,000[1] |
| **Intrepid** | | | |
| 1998-99 | *3.2L V6 | T295 | 105,000 |
| 2000 | *3.2L V6 | T295 | 100,000 Federal<br>105,000 California |
| 1993-94 | 3.5L V6 | T219 | 105,000 |
| 1995-97 | 3.5L V6 | T255 | 105,000 |
| 2000 | 3.5L V6 | T295 | 100,000 Federal<br>105,000 California |
| **Lancer** | | | |
| 1985-88 | 2.2L 4-Cyl. | T071[3] | 60,000[1] |
| 1989 | 2.2L 4-Cyl. | T153[3] | 60,000[1] |
| 1986-87 | 2.5L 4-Cyl. | T114 | 60,000[1] |
| 1988 | 2.5L 4-Cyl. | T132 | 60,000[1] |
| 1989 | 2.5L 4-Cyl. | T153[3] | 60,000[1] |
| **Neon** | | | |
| 1995-99 | *2.0L 4-Cyl. (DOHC, VIN Y) | T246 | 105,000 |
| 1995-00 | *2.0L 4-Cyl. (SOHC, VIN C) | T245 | 105,000 |
| **Omni** | | | |
| 1978-83 | 1.7L 4-Cyl. | T017[3] | 60,000[1] |
| 1981-88 | 2.2L 4-Cyl. | T071[3] | 60,000[1] |
| 1989-90 | 2.2L 4-Cyl. | T153[3] | 60,000[1] |
| **Rampage** | | | |
| 1982-84 | 2.2L 4-Cyl. | T071[3] | 60,000[1] |
| **Shadow** | | | |
| 1987-88 | 2.2L 4-Cyl. | T071[3] | 60,000[1] |
| 1989-94 | 2.2L 4-Cyl. | T153[3] | 60,000[1] |
| 1988 | 2.5L 4-Cyl. | T132[3] | 60,000[1] |
| 1989-94 | 2.5L 4-Cyl. | T153[3] | 60,000[1] |
| 1992-93 | 3.0L V6 (SOHC) | T139[3] | 60,000 |
| 1994 | 3.0L V6 (SOHC) | T139[3] | 60,000 |
| **Spirit** | | | |
| 1991-92 | 2.2L 4-Cyl. (DOHC, VIN A) | T206 | 60,000[1] |
| 1985-89 | 2.5L 4-Cyl. | T153[3] | 60,000[1] |
| 1989-93 | 3.0L V6 (SOHC) | T139[3] | 60,000 |
| 1994-95 | 3.0L V6 (SOHC) | T139[3] | 60,000 |

* - Interference Engine. Other interference engine applications may exist which are not listed here. See page 19 for interference engine cautions.

[1] - Although the vehicle manufacturer does not recommend a specific scheduled maintenance interval, belt manufacturers suggest the belt be replaced at 60,000 miles intervals.

[2] - The vehicle manufacturer recommends replacing all belts at the same time.

[3] - A timing belt component kit is available for this application.

# Timing Belt Replacement Recommendations

| Make/ Model Year | Engine | Belt Part No. | Recommended Replacement (Miles) |
|---|---|---|---|
| **DODGE (Cont.)** | | | |
| **Stealth** | | | |
| 1991-96 | *3.0L V6 (DOHC) | T195 | 60,000 |
| 1991-93 | 3.0L V6 (SOHC) | T139[3] | 60,000 |
| 1994-96 | 3.0L V6 (SOHC) | T139[3] | 60,000 |
| **Stratus** | | | |
| 2000 | *2.0L 4-Cyl. (SOHC, VIN C) | T245 | 100,000 Federal 105,000 Calif. |
| 1995-99 | 2.4L 4-Cyl. (DOHC, VIN X) | T265 | 105,000 |
| 2000 | 2.4L 4-Cyl. (DOHC, VIN X) | T265 | 100,000 Federal 105,000 California |
| 1995-00 | *2.5L V6 | T259 | 60,000 |
| **024** | | | |
| 1981-82 | 1.7L 4-Cyl. | T017[3] | 60,000[1] |
| 1981-82 | 2.2L 4-Cyl. | T071[3] | 60,000[1] |
| **400** | | | |
| 1982-83 | 2.2L 4-Cyl. | T071[3] | 60,000[1] |
| **600** | | | |
| 1983-88 | 2.2L 4-Cyl. | T071[3] | 60,000[1] |
| 1986-87 | 2.5L 4-Cyl. | T114 | 60,000[1] |
| 1988 | 2.5L 4-Cyl. | T132 | 60,000[1] |
| **2000 GTX (Canadian)** | | | |
| 1989-92 | 2.0L 4-Cyl. (SOHC) | | |
| | Balance Shaft | T159 | 60,000[2] |
| | Camshaft | T155 | 60,000[2] |
| **DODGE/PLYMOUTH** | | | |
| **Light Trucks** | | | |
| **Caravan** | | | |
| 1982-88 | 2.2L 4-Cyl. | T071[3] | 60,000 |
| 1986-87 | 2.5L 4-Cyl. | T114 | 60,000[1] |
| 1988 | 2.5L 4-Cyl. | T132 | 60,000[1] |
| 1989-95 | 2.5L 4-Cyl. | T153[3] | 60,000[1] |
| 1996-00 | 2.4L 4-Cyl. (DOHC, VIN B) | T265 | 120,000 |
| 1987-93 | 3.0L V6 (SOHC) | T139[3] | 60,000 |
| 1994-96 | 3.0L V6 (SOHC) | T139[3] | 60,000 |
| 1997-00 | 3.0L V6 (SOHC) | T139[3] | |
| **Dakota** | | | |
| 1987-88 | 2.2L 4-Cyl. | T071[3] | 60,000[1] |
| 1989-95 | 2.5L 4-Cyl. | T153[3] | 60,000[1] |
| **Mini Ram Van** | | | |
| 1984-87 | 2.2L 4-Cyl. | T071[3] | 60,000[1] |
| 1987 | 2.5L 4-Cyl. | T114 | 60,000[1] |
| 1988 | 2.5L 4-Cyl. | T132 | 60,000[1] |
| 1987-93 | 3.0L V6 (SOHC) | T139[3] | 60,000 |
| **Raider** | | | |
| 1989 | 3.0L V6 (SOHC) | T139[3] | 60,000 |
| **Ram 50** | | | |
| 1983-86 | 2.0L 4-Cyl. (SOHC) | | |
| | Balance Shaft | T090 | 60,000[2] |
| | Camshaft | T089 | 60,000[2] |
| 1987-89 | 2.0L 4-Cyl. (SOHC) | | |
| | Balance Shaft | T159[3] | 60,000[2] |
| | Camshaft | T158[3] | 60,000[2] |
| 1983-86 | 2.3L 4-Cyl. Diesel | | |
| | *Balance Shaft | T092 | 50,000[2] |
| | *Camshaft | T091 | 50,000[2] |
| 1990-92 | 2.4L 4-Cyl. | | |
| | Balance Shaft | T159[3] | 60,000[2] |
| | Camshaft | T124[3] | 60,000[2] |
| 1993 | 2.4L 4-Cyl. | | |
| | Balance Shaft | T168 | 60,000[2] |
| | Camshaft | T229 | 60,000[2] |
| 1990-91 | 3.0L V6 (SOHC) | T139[3] | 60,000 |
| **DODGE/PLYMOUTH (Cont.)** | | | |
| **Scamp Pickup** | | | |
| 1983 | 2.2L 4-Cyl. | T071[3] | 60,000[1] |
| **Light Trucks** | | | |
| **Voyager** | | | |
| 1982-88 | 2.2L 4-Cyl. | T071[3] | 60,000[1] |
| 1986-87 | 2.5L 4-Cyl. | T114 | 60,000[1] |
| 1988 | 2.5L 4-Cyl. | T132 | 60,000[1] |
| 1989-95 | 2.5L 4-Cyl. | T153[3] | 60,000[1] |
| 1987-93 | 3.0L V6 (SOHC) | T139[3] | 60,000 |
| 1994-96 | 3.0L V6 (SOHC) | T139[3] | 60,000 |
| 1997-00 | 3.0L V6 (SOHC) | T139[3] | |
| 1996-00 | 2.4L 4-Cyl. (DOHC, VIN B) | T265 | 120,000 |
| **EAGLE** | | | |
| **Medallion** | | | |
| 1989 | 2.2L 4-Cyl. | T140 | 60,000[1] |
| **Summit** | | | |
| 1989-90 | *1.5L 4-Cyl. | T128[3] | 60,000 |
| 1991-96 | 1.5L 4-Cyl. | T191[3] | 60,000 |
| 1989-90 | *1.6L 4-Cyl. (DOHC) | T165 | 60,000 |
| 1992-96 | 1.8L 4-Cyl. (VINs C & D) | T201 | 60,000 |
| 1992 | 2.4L 4-Cyl. | | |
| | Balance Shaft | T159 | 60,000[2] |
| | Camshaft | T204 | 60,000[2] |
| 1993-96 | 2.4L 4-Cyl. | | |
| | Balance Shaft | T168 | 60,000[2] |
| | Camshaft | T230 | 60,000[2] |
| **Summit Wagon** | | | |
| 1992-96 | 1.8L 4-Cyl. (VINs C & D) | T201 | 60,000 |
| **Talon** | | | |
| 1993-94 | 1.8L 4-Cyl. | | |
| | Balance Shaft | T159[3] | 60,000[2] |
| | Camshaft | T158[3] | 60,000[2] |
| 1995-98 | *2.0L 4-Cyl. (DOHC, VIN Y) | T246 | 60,000 |
| 1990-98 | 2.0L 4-Cyl. (DOHC) | | |
| | *Balance Shaft | T168[3] | 60,000[2] |
| | *Camshaft | T167[3] | 60,000[2] |
| **Vision** | | | |
| 1993-94 | 3.5L V6 | T219 | 105,000 |
| 1995-97 | 3.5L V6 | T255 | 105,000 |
| **Vista (Canadian)** | | | |
| 1989-91 | *1.5L 4-Cyl. | T128[3] | 60,000 |
| 1992 | 1.5L 4-Cyl. | T191[3] | 60,000 |
| 1989-90 | *1.6L 4-Cyl. (DOHC) | T165 | 60,000 |
| 1989 | 1.6L 4-Cyl. w/o Bal. Shaft | T093 | 60,000 |
| 1989-91 | 2.0L 4-Cyl. (SOHC) | | |
| | Balance Shaft | T159[3] | 60,000[2] |
| | Camshaft | T158[3] | 60,000[2] |
| **2000GTX (Canadian)** | | | |
| 1989-93 | 2.0L 4-Cyl. (DOHC) | | |
| | *Balance Shaft | T168[3] | 60,000[2] |
| | *Camshaft | T167[3] | 60,000[2] |
| 1989-92 | 2.0L 4-Cyl. (SOHC) | | |
| | Balance Shaft | T159 | 60,000[2] |
| | Camshaft | T155 | 60,000[2] |
| **FIAT** | | | |
| **Brava** | | | |
| 1974-78 | *1.8L 4-Cyl. | T020 | 25,000 |
| 1979-83 | *2.0L 4-Cyl. | T068 | 30,000 |
| **Spider 2000** | | | |
| 1979-82 | *2.0L 4-Cyl. | T068 | 30,000 |
| **Strada** | | | |
| 1979-82 | *1.5L 4-Cyl. | T069 | 30,000 |

* - Interference Engine. Other interference engine applications may exist which are not listed here. See page 19 for interference engine cautions.

[1] - Although the vehicle manufacturer does not recommend a specific scheduled maintenance interval, belt manufacturers suggest the belt be replaced at 60,000 miles intervals.

[2] - The vehicle manufacturer recommends replacing all belts at the same time.

[3] - A timing belt component kit is available for this application.

# Timing Belt Replacement Recommendations

| Make/ Model Year | Engine | Belt Part No. | Recommended Replacement (Miles) |
|---|---|---|---|
| **FIAT (Cont.)** | | | |
| **X1/9** | | | |
| 1974-78 | *1.3L 4-Cyl. | T018 | 36,000 |
| 1979-83 | *1.5L 4-Cyl. | T069 | 30,000 |
| **124 Series** | | | |
| 1971-74 | *1.6L 4-Cyl. | T020 | 25,000 |
| 1974-78 | *1.8L 4-Cyl. | T020 | 25,000 |
| **128 Series** | | | |
| 1973-79 | *1.3L 4-Cyl. | T018 | 36,000 |
| **131 Series** | | | |
| 1975-78 | *1.8L 4-Cyl. | T020 | 25,000 |
| **FORD** | | | |
| **Passenger Cars** | | | |
| **Aspire** | | | |
| 1994-97 | 1.3L 4-Cyl. | T185 | 60,000 Federal 105,000 California |
| **Contour** | | | |
| 1995-97 | 2.0L 4-Cyl. (DOHC, VIN 3) | T258 | 60,000[1] |
| 1998-00 | 2.0L 4-Cyl. (DOHC, VIN 3) | T294 | Inspect at 120,000; Replace if needed. |
| **Escort** | | | |
| 1981-85 | *1.6L 4-Cyl. (SOHC) | T067[3] | 60,000 |
| 1991-96 | 1.8L 4-Cyl. (DOHC) | T179[3] | 60,000 |
| 1985-90 | *1.9L 4-Cyl. | T067[3] | 60,000 |
| 1991 | 1.9L 4-Cyl. | | |
| | *Before 3/25/1991 | T067[3] | 60,000 |
| | *After 3/26/1991 | T194[3] | 60,000 |
| 1992-96 | *1.9L 4-Cyl. | T194[3] | 60,000 |
| 1984-87 | 2.0L 4-Cyl. Diesel | | |
| | *Camshaft | T103 | 100,000[2] |
| | *Injection Pump | T102 | 100,000[2] |
| 1997-00 | 2.0L 4-Cyl. (SOHC, VIN P) | T283 | Inspect at 120,000; Replace if needed. |
| 2001 | 2.0L 4-Cyl. (SOHC, VIN P) | T283 | 120,000 |
| **Escort Coupe & ZX2** | | | |
| 1998-00 | 2.0L 4-Cyl. (DOHC, VIN 3) | T294 | Inspect at 120,000; Replace if needed. |
| 2001 | 2.0L 4-Cyl. (DOHC, VIN 3) | T294 | 120,000 |
| **EXP** | | | |
| 1981-85 | *1.6L 4-Cyl. (SOHC) | T067[3] | 60,000 |
| 1985-90 | *1.9L 4-Cyl. | T067[3] | 60,000 |
| **Fairmont** | | | |
| 1978-83 | 2.3L 4-Cyl. | T014[3] | 60,000[1] |
| **Festiva** | | | |
| 1988-89 | 1.3L 4-Cyl. | T141[3] | 60,000 |
| 1990-93 | 1.3L 4-Cyl. | T185 | 60,000 |
| **Focus** | | | |
| 2000 | 2.0L 4-Cyl. (DOHC, VIN 3) | T294 | Inspect at 120,000; Replace if needed. |
| 2001 | 2.0L 4-Cyl. (DOHC, VIN 3) | T294 | 120,000 |
| 2000 | 2.0L 4-Cyl. (SOHC, VIN P) | T283 | Inspect at 120,000; Replace if needed. |
| 2001 | 2.0L 4-Cyl. (SOHC, VIN P) | T283 | 120,000 |
| **Granada** | | | |
| 1981-82 | 2.3L 4-Cyl. | T014[3] | 60,000[1] |
| **LTD** | | | |
| 1983-86 | 2.3L 4-Cyl. | T014[3] | 60,000[1] |
| **Mustang** | | | |
| 1974-91 | 2.3L 4-Cyl. | T014[3] | 60,000[1] |
| 1992 | 2.3L 4-Cyl. | | |
| | Square Tooth Sprocket | T014[3] | 60,000[1] |
| | Round Tooth Sprocket | T210 | 60,000[1] |
| 1993 | 2.3L 4-Cyl. | T210 | 60,000[1] |
| **FORD (Cont.)** | | | |
| **Pinto** | | | |
| 1971-74 | 2.0L 4-Cyl. | T013 | 60,000[1] |
| 1974-80 | 2.3L 4-Cyl. | T014[3] | 60,000[1] |
| **Probe** | | | |
| 1989-92 | *2.2L 4-Cyl. | T134[3] | 60,000 |
| 1993-97 | *2.0L 4-Cyl. | T228[3] | 60,000 Federal 105,000 California |
| 1993-97 | 2.5L V6 | T214 | 60,000 Federal 105,000 California |
| **Taurus SHO** | | | |
| 1989-95 | 3.0L V6 | T248 | 100,000 |
| 1993-95 | 3.2L V6 | T248 | 100,000 |
| **Tempo** | | | |
| 1984-86 | 2.0L 4-Cyl. Diesel | | |
| | *Camshaft | T103 | 100,000[2] |
| | *Injection Pump | T102 | 100,000[2] |
| **Thunderbird** | | | |
| 1983-88 | 2.3L 4-Cyl. | T014[3] | 60,000[1] |
| **Light Trucks** | | | |
| **Aerostar** | | | |
| 1987 | 2.3L 4-Cyl. | T014[3] | 60,000[1] |
| **Courier** | | | |
| 1977-82 | 2.3L 4-Cyl. | T014[3] | 60,000[1] |
| **Escape** | | | |
| 2001 | 2.0L 4-Cyl. (DOHC) | T294 | 120,000 |
| **Ranger** | | | |
| 1983-88 | 2.0L 4-Cyl. | T014[3] | 60,000[1] |
| 1983-91 | 2.3L 4-Cyl. | T014[3] | 60,000[1] |
| 1992 | 2.3L 4-Cyl. | | |
| | Square Tooth Sprocket | T014 | 60,000[1] |
| | Round Tooth Sprocket | T210 | 60,000[1] |
| 1993-94 | 2.3L 4-Cyl. | T210 | 60,000[1] |
| 1995-97 | 2.3L 4-Cyl. | T276 | 60,000 |
| 1985-87 | 2.3L 4-Cyl. Diesel | | |
| | *Camshaft | T091 | 60,000[1] |
| | *Balance Shaft | T092 | 60,000[1] |
| 1998-00 | 2.5L 4-Cyl. | T276 | Inspect At 120,000; Replace if needed. |
| 2001 | 2.5L 4-Cyl. | T276 | 120,000 |
| **G.M.C. (SEE CHEVROLET/G.M.C.)** | | | |
| **GEO** | | | |
| **Passenger Cars** | | | |
| **Metro** | | | |
| 1989-92 | 1.0L 3-Cyl. | T166 | 60,000 |
| 1993 | 1.0L 3-Cyl. | | |
| | 4-Bolt Sprocket | T166 | 60,000 |
| | 5-Bolt Sprocket | T241 | 60,000 |
| 1994-95 | 1.0L 3-Cyl. | T241 | 60,000 |
| 1996 | 1.0L 3-Cyl. | T194[3] | 60,000 |
| 1997-00 | 1.0L 3-Cyl. | T194[3] | 100,000 |
| 1992-93 | 1.3L 4-Cyl. | T095 | 60,000 |
| 1994 | 1.3L 4-Cyl. | T243 | 60,000 |
| 1995-97 | 1.3L 4-Cyl. | T272 | 60,000 |
| **Metro (Canadian)** | | | |
| 1992-93 | 1.3L 4-Cyl. | T095 | 60,000 |
| 1994 | 1.3L 4-Cyl. | T243 | 60,000 |
| **Prizm** | | | |
| 1937-97 | *1.6L 4-Cyl. (DOHC, VIN 6) | T236[3] | 60,000 |
| 1993-97 | *1.8L 4-Cyl. (DOHC, VIN B) | T235 | 60,000 |
| **Prizm GSI** | | | |
| 1990-91 | 1.6L 4-Cyl. (DOHC) | T176 | 60,000 |

* - Interference Engine. Other interference engine applications may exist which are not listed here. See page 19 for interference engine cautions.

[1] - Although the vehicle manufacturer does not recommend a specific scheduled maintenance interval, belt manufacturers suggest the belt be replaced at 60,000 miles intervals.

[2] - The vehicle manufacturer recommends replacing all belts at the same time.

[3] - A timing belt component kit is available for this application.

# Timing Belt Replacement Recommendations

| Make/ Model Year | Engine | Belt Part No. | Recommended Replacement (Miles) |
|---|---|---|---|
| **GEO (Cont.)** | | | |
| **Spectrum** | | | |
| 1985 | *1.5L 4-Cyl. | T118 | 60,000 |
| 1986-87 | 1.5L 4-Cyl | | |
| | *Up To 6/30/1986 | T118 | 60,000 |
| | *From 7/1/1986 | T162 | 60,000 |
| 1988-89 | *1.5L 4-Cyl. | T162 | 60,000 |
| **Storm** | | | |
| 1990-91 | 1.6L 4-Cyl. (DOHC) | T169 | 60,000 |
| 1990-93 | *1.6L 4-Cyl. (SOHC) | T177 | 30,000 |
| 1992-93 | 1.8L 4-Cyl. (DOHC) | T205 | 60,000 |
| **Light Trucks** | | | |
| **Tracker** | | | |
| 1989-95 | 1.6L 4-Cyl. (8-Valve) | | |
| | California | T212 | 60,000[1] |
| | Except California | T164 | 60,000[1] |
| 1994-98 | 1.6L 4-Cyl. (16-Valve) | | |
| | California | T212 | 60,000 |
| | Except California | T164 | 60,000 |
| 1999-01 | 1.6L 4-Cyl. (16-Valve) | T212 | 60,000 |
| **HONDA** | | | |
| **Passenger Cars** | | | |
| **Accord** | | | |
| 1976-83 | *1.6L 4-Cyl. (SOHC) | T041 | 60,000[1] |
| 1979-83 | *1.8L 4-Cyl. | T041 | 60,000[1] |
| 1984-85 | *1.8L 4-Cyl. | T094[3] | 60,000[1] |
| 1986-89 | *2.0L 4-Cyl. | T160[3] | 60,000[1] |
| 1990-93 | *2.2L 4-Cyl. (SOHC) | | |
| | *Balance Shaft | T186[3] | 90,000[2] |
| | *Camshaft | T187[3] | 90,000[2] |
| 1994 (EX) | 2.2L 4-Cyl. (SOHC) | | |
| | *Balance Shaft | T186[3] | 90,000[2] |
| | *Camshaft | T244[3] | 90,000[2] |
| 1994 (Exc. EX) | 2.2L 4-Cyl. (SOHC) | | |
| | *Balance Shaft | T186[3] | 90,000[2] |
| | *Camshaft | T187[3] | 90,000[2] |
| 1995 (EX) | 2.2L 4-Cyl. (SOHC) | | |
| | *Balance Shaft | T186[3] | 90,000[2], Normal<br>60,000[2], Severe |
| | *Camshaft | T244[3] | 90,000[2], Normal<br>60,000[2], Severe |
| 1995 (Exc. EX) | 2.2L 4-Cyl. (SOHC) | | |
| | *Balance Shaft | T186[3] | 90,000[2], Normal<br>60,000[2], Severe |
| | *Camshaft | T187[3] | 90,000[2], Normal<br>60,000[2], Severe |
| 1996 | 2.2L 4-Cyl. (SOHC) | | |
| | *Balance Shaft | T186 | 90,000[2], Normal<br>60,000[2], Severe |
| | *Camshaft (w/o VTEC) | T187[3] | 90,000[2], Normal<br>60,000[2], Severe |
| | *Camshaft (w/ VTEC) | T244[3] | 90,000[2], Normal<br>60,000[2], Severe |
| 1997 | 2.2L 4-Cyl. (SOHC) | | |
| | *Balance Shaft | T186 | 105,000[2] |
| | *Camshaft (w/o VTEC) | T187[3] | 105,000[2] |
| | *Camshaft (w/ VTEC) | T244 | 105,000[2] |
| 1998-01 | 2.3L 4-Cyl. (SOHC) | | |
| | *Balance Shaft | T186 | 105,000[2] |
| | *Camshaft | T244 | 105,000[2] |
| 1996 | *2.7L V6 | T263 | 90,000 Normal<br>60,000 Normal |
| 1997 | *2.7L V6 | T263 | 105,000 |
| 1998-01 | *3.0L V6 | T286 | 105,000 |
| **HONDA (Cont.)** | | | |
| **Civic** | | | |
| 1973-79 | *1.2L 4-Cyl. | T028 | 60,000[1] |
| 1980-83 | *1.3L 4-Cyl. | | |
| | *Canada | T028 | 60,000[1] |
| | *USA | T073 | 60,000[1] |
| 1984-85 | *1.3L 4-Cyl. | T099 | 60,000[1] |
| 1986-87 | *1.3L 4-Cyl. | T161 | 60,000[1] |
| 1980-83 | *1.5L 4-Cyl. | T041 | 60,000[1] |
| 1984-85 | *1.5L 4-Cyl. | T099 | 60,000[1] |
| 1986-87 | *1.5L 4-Cyl. | T161[3] | 60,000[1] |
| 1988-89 | *1.5L 4-Cyl. | T143[3] | 60,000[1] |
| 1990-94 | *1.5L 4-Cyl. | T143[3] | 90,000 |
| 1995 | *1.5L 4-Cyl. | T143[3] | 90,000, Normal<br>60,000, Severe |
| 1988-89 | *1.6L 4-Cyl. (SOHC) | T145 | 60,000[1] |
| 1991 | *1.6L 4-Cyl. (SOHC) | T145 | 90,000 |
| 1992 | | | |
| Except Si | *1.6L 4-Cyl. (SOHC) | T145 | 90,000 |
| Si | *1.6L 4-Cyl. (SOHC) | T224 | 90,000 |
| 1993-94 | *1.6L 4-Cyl. (SOHC) | T224 | 90,000 |
| 1995 | *1.6L 4-Cyl. (SOHC) | T224 | 90,000 Normal<br>60,000 Severe |
| 1996 | *1.6L 4-Cyl. (SOHC) | T224 | 90,000 Normal<br>60,000 Severe |
| 1997-00 | *1.6L 4-Cyl. (SOHC) | T224 | 105,000 |
| 2001 | 1.7L 4-Cyl. (SOHC) | T312 | 110,000 |
| **Civic CVCC** | | | |
| 1975 | *1.5L 4-Cyl. | T036[3] | 60,000[1] |
| 1976-79 | *1.5L 4-Cyl. | T041 | 60,000[1] |
| **Civic CRX** | | | |
| 1984 | *1.3L 4-Cyl. | T099 | 60,000[1] |
| 1984-85 | *1.5L 4-Cyl. | T099 | 60,000[1] |
| 1986-87 | *1.5L 4-Cyl. | T161[3] | 60,000[1] |
| 1988-89 | *1.6L 4-Cyl. (SOHC) | T145 | 60,000[1] |
| 1990-91 | *1.6L 4-Cyl. (SOHC) | T145 | 90,000 |
| **Civic del Sol (Except VX)** | | | |
| 1993-94 | *1.5L 4-Cyl. | T143[3] | 90,000 |
| 1995 | *1.5L 4-Cyl. | T143[3] | 90,000, Normal<br>60,000, Severe |
| 1993-94 | *1.6L 4-Cyl. (SOHC) | T224 | 90,000 |
| 1995 | *1.6L 4-Cyl. (SOHC) | T224 | 90,000 Normal<br>60,000 Severe |
| 1996 | *1.6L 4-Cyl. (SOHC) | T224 | 90,000 Normal<br>60,000 Severe |
| 1997 | *1.6L 4-Cyl. (SOHC) | T224 | 105,000 |
| 1994 | *1.6L 4-Cyl. (DOHC) | T227 | 90,000 |
| 1995-94 | *1.6L 4-Cyl. (DOHC) | T227 | 90,000 Normal<br>60,000 Severe |
| 1997 | *1.6L 4-Cyl. (DOHC) | T227 | 105,000 |
| **Civic del Sol VX** | | | |
| 1993-94 | *1.5L 4-Cyl. | T223 | 90,000 |
| 1995 | *1.5L 4-Cyl. | T223 | 90,000, Normal<br>60,000, Severe |
| **Civic VX** | | | |
| 1992-94 | *1.5L 4-Cyl. | T223 | 90,000 |
| 1995 | *1.5L 4-Cyl. | T223 | 90,000, Normal<br>60,000, Severe |
| **Prelude** | | | |
| 1980-82 | *1.6L 4-Cyl. (SOHC) | T041 | 60,000[1] |
| 1979-82 | *1.8L 4-Cyl. | T041 | 60,000[1] |
| 1983-85 | *1.8L 4-Cyl. | T094[3] | 60,000[1] |
| 1986-87 | *1.8L 4-Cyl. | T160[3] | 60,000[1] |
| 1985 | *2.0L 4-Cyl. | T094[3] | 60,000[1] |
| 1986-87 | *2.0L 4-Cyl. (SOHC) | T160[3] | 60,000[1] |

* - Interference Engine. Other interference engine applications may exist which are not listed here. See page 19 for interference engine cautions.

[1] - Although the vehicle manufacturer does not recommend a specific scheduled maintenance interval, belt manufacturers suggest the belt be replaced at 60,000 miles intervals.

[2] - The vehicle manufacturer recommends replacing all belts at the same time.

[3] - A timing belt component kit is available for this application.

# Timing Belt Replacement Recommendations

| Make/ Model Year | Engine | Belt Part No. | Recommended Replacement (Miles) |
|---|---|---|---|
| **HONDA (Cont.)** | | | |
| **Prelude (continued)** | | | |
| 1988-89 | *2.0L 4-Cyl. (SOHC) | T144 | 60,000[1] |
| 1990 | *2.0L 4-Cyl. (SOHC) | T144 | 90,000 |
| 1988-89 | *2.0L 4-Cyl. (DOHC) | T142 | 60,000[1] |
| 1990-91 | *2.0L 4-Cyl. (DOHC) | T141 | 90,000 |
| 1990-91 | *2.1L 4-Cyl. (DOHC) | T142 | 90,000 |
| 1993-94 | 2.2L 4-Cyl. (DOHC) | | |
| | *Balance Shaft | T186[3] | 90,000[2] |
| | *Camshaft | T226[3] | 90,000[2] |
| 1995-96 | 2.2L 4-Cyl. (DOHC) | | |
| | *Balance Shaft | T186[3] | 90,000[2], Normal<br>60,000[2], Severe |
| | *Camshaft | T226[3] | 90,000[2], Normal<br>60,000[2], Severe |
| 1997-01 | 2.2L 4-Cyl. (DOHC) | | |
| | *Balance Shaft | T186[3] | 105,000[2] |
| | *Camshaft | T226[3] | 105,000[2] |
| 1992-94 | 2.2L 4-Cyl. (SOHC) | | |
| | *Balance Shaft | T186[3] | 90,000[2] |
| | *Camshaft | T187[3] | 90,000[2] |
| 1995-96 | 2.2L 4-Cyl. (SOHC) | | |
| | *Balance Shaft | T186[3] | 90,000[2], Normal<br>60,000[2], Severe |
| | *Camshaft | T187[3] | 90,000[2], Normal<br>60,000[2], Severe |
| 1992-94 | 2.3L 4-Cyl. (DOHC) | | |
| | *Balance Shaft | T186 | 90,000[2] |
| | *Camshaft | T216 | 90,000[2] |
| 1995-96 | 2.3L 4-Cyl. (DOHC) | | |
| | *Balance Shaft | T186 | 90,000[2], Normal<br>60,000[2], Severe |
| | *Camshaft | T216 | 90,000[2], Normal<br>60,000[2], Severe |
| **Light Trucks** | | | |
| **CR-V** | | | |
| 1997-01 | *2.0L 4-Cyl. | T184 | 105,000 |
| **Odyssey** | | | |
| 1995-96 | 2.2L 4-Cyl. (SOHC) | | |
| | *Balance Shaft | T186[3] | 90,000[2] |
| | *Camshaft | T187[3] | 90,000[2] |
| 1997 | 2.2L 4-Cyl. (SOHC) | | |
| | *Balance Shaft | T186[3] | 105,000[2] |
| | *Camshaft | T187[3] | 105,000[2] |
| 1998 | 2.3L 4-Cyl. (SOHC) | | |
| | *Balance Shaft | T186 | 105,000[2] |
| | *Camshaft | T244 | 105,000[2] |
| 1999-01 | *3.5L V6 | T286 | 105,000 |
| **Passport** | | | |
| 1994-96 | *2.6L 4-Cyl. | T147 | 60,000 |
| 1994-97 | 3.2L V6 (SOHC) | T221 | 60,000 |
| 1998-99 | 3.2L V6 (DOHC) | T303 | 75,000 |
| 2000-01 | 3.2L V6 (DOHC) | T303 | 105,000 |
| **HYUNDAI** | | | |
| **Accent** | | | |
| 1995-96 | *1.5L 4-Cyl. (DOHC) | T282 | 60,000 |
| 1997 | *1.5L 4-Cyl. (DOHC) | T282 | 60,000 |
| 1995-96 | *1.5L 4-Cyl. (SOHC) | T191[3] | 60,000 |
| 1997-01 | 1.5L 4-Cyl. (SOHC) | T191[3] | 60,000 |
| 2001 | *1.6L 4-Cyl. (DOHC) | T282 | 60,000 |
| **Elantra** | | | |
| 1992-95 | 1.6L 4-Cyl. (DOHC) | | |
| | *Balance Shaft | T168 | 60,000[2] |
| | *Camshaft | T165 | 60,000[2] |
| **HYUNDAI (Cont.)** | | | |
| **Elantra (continued)** | | | |
| 1993-95 | 1.8L 4-Cyl. (DOHC) | | |
| | *Balance Shaft | T168[3] | 60,000[2] |
| | *Camshaft | T167[3] | 60,000[2] |
| 1996-98 | *1.8L 4-Cyl. | T278 | 60,000 |
| 1999-01 | *2.0L 4-Cyl. | T284 | 60,000 |
| **Excel** | | | |
| 1986-89 | *1.5L 4-Cyl. (SOHC) | T073 | 60,000 |
| 1990-94 | *1.5L 4-Cyl. (SOHC) | T128[3] | 60,000 |
| **Scoupe** | | | |
| 1991-93 | *1.5L 4-Cyl. (SOHC) | T128[3] | 60,000 |
| 1994-95 | *1.5L 4-Cyl. (SOHC) | T128[3] | 60,000 |
| **Sonata** | | | |
| 1992-98 | 2.0L 4-Cyl. (DOHC) | | |
| | *Balance Shaft | T168[3] | 60,000[2] |
| | *Camshaft | T167[3] | 60,000[2] |
| 1989-91 | 2.4L 4-Cyl. (SOHC) | | |
| | *Balance Shaft | T159[3] | 60,000[2] |
| | *Camshaft | T124[3] | 60,000[2] |
| 1990-98 | *3.0L V6 | T139[3] | 60,000 |
| **Tiburon** | | | |
| 1997 | *1.8L 4-Cyl. | T278 | 60,000 |
| 1999-01 | *2.0L 4-Cyl. | T284 | 60,000 |
| **INFINITI** | | | |
| **Passenger Cars** | | | |
| **J30** | | | |
| 1993 | *3.0L V6 | T180 | 60,000 |
| 1994-97 | *3.0L V6 | T251 | 60,000 |
| **M30** | | | |
| 1990-92 | *3.0L V6 | T104 | 60,000 |
| **Light Trucks** | | | |
| **QX4** | | | |
| 1997-01 | 3.3L V6 (SOHC) | T249 | 105,000 |
| **ISUZU** | | | |
| **Passenger Cars** | | | |
| **I-Mark** | | | |
| 1981-84 | *1.8L 4-Cyl. Diesel | T076 | 60,000 |
| 1985-87 | 1.5L 4-Cyl. | | |
| | *Up To 6/30/86 | T118 | 60,000 |
| | *From 7/1/86 | T162 | 60,000 |
| 1988-89 | *1.5L 4-Cyl. | T162 | 60,000 |
| 1989 | *1.6L 4-Cyl. (DOHC) | T169 | 60,000 |
| **Impulse** | | | |
| 1985-89 | *2.0L 4-Cyl. Turbo | T121 | 60,000 |
| 1988-89 | *2.3L 4-Cyl. | T122 | 60,000 |
| 1990-92 | 1.6L 4-Cyl. (DOHC) | T169 | 60,000 |
| 1991-93 | *1.6L 4-Cyl. Turbo | T169 | 60,000 |
| 1992 | 1.8L 4-Cyl. | T205 | 60,000 |
| **Stylus** | | | |
| 1991 | 1.6L 4-Cyl. (DOHC) | T169 | 60,000 |
| 1991-93 | 1.6L 4-Cyl. (SOHC) | T177 | 60,000 |
| 1992-93 | 1.8L 4-Cyl. | T205 | 60,000 |
| **Light Trucks** | | | |
| **Amigo** | | | |
| 1998 | *2.2L 4-Cyl. | T305 | 75,000 |
| 1999-00 | *2.2L 4-Cyl. | T305 | 100,000, Normal<br>75,000, Severe |
| 1989-93 | *2.3L 4-Cyl. | T122 | 60,000 |
| 1989-94 | *2.6L 4-Cyl. | T147 | 60,000 |
| 1998 | 3.2L V6 | T303 | 75,000 |
| 1999 | 3.2L V6 | T303 | 100,000 Normal<br>75,000 Severe |

* - Interference Engine. Other interference engine applications may exist which are not listed here. See page 19 for interference engine cautions.

[1] - Although the vehicle manufacturer does not recommend a specific scheduled maintenance interval, belt manufacturers suggest the belt be replaced at 60,000 miles intervals.

[2] - The vehicle manufacturer recommends replacing all belts at the same time.

[3] - A timing belt component kit is available for this application.

# Timing Belt Replacement Recommendations

| Make/ Model Year | Engine | Belt Part No. | Recommended Replacement (Miles) |
|---|---|---|---|
| **ISUZU (Cont.)** | | | |
| **Oasis** | | | |
| 1996 | 2.2L 4-Cyl. (SOHC) | | |
| | *Balance Shaft | T186[3] | 90,000[2] |
| 1996 (cont'd) | *Camshaft | T187[3] | 90,000[2] |
| 1997 | 2.2L 4-Cyl. (SOHC) | | |
| | *Balance Shaft | T186[3] | 105,000[2] |
| | *Camshaft | T187[3] | 105,000[2] |
| 1998 | 2.3L 4-Cyl. (SOHC) | | |
| | *Balance Shaft | T186 | 105,000[2] |
| | *Camshaft | T244 | 105,000[2] |
| **Pickup & P'UP** | | | |
| 1981-87 | *2.2L 4-Cyl. Diesel | T075 | 60,000 |
| 1986-95 | *2.3L 4-Cyl. | T122 | 60,000 |
| 1988-95 | *2.6L 4-Cyl. | T147 | 60,000 |
| **Rodeo** | | | |
| 1998 | *2.2L 4-Cyl. | T305 | 75,000 |
| 1999-00 | *2.2L 4-Cyl. | T305 | 100,000, Normal 75,000, Severe |
| 2001 | *2.2L 4-Cyl. | T305 | 75,000, Normal 60,000, Severe |
| 1991-97 | *2.6L 4-Cyl. | T147 | 60,000 |
| 1993-97 | 3.2L V6 (SOHC) | T221 | 60,000 |
| 1998 | 3.2L V6 | T303 | 75,000 |
| 1999-01 | 3.2L V6 | T303 | 100,000 Normal 75,000 Severe |
| **Trooper** | | | |
| 1990-91 | *2.6L 4-Cyl. | T147 | 60,000 |
| 1992-95 | 3.2L V6 (DOHC) | T220 | 60,000 |
| 1992-97 | 3.2L V6 (SOHC) | T221 | 60,000 |
| 1998 | 3.5L V6 | T303 | 75,000 |
| 1999-01 | 3.5L V6 | T303 | 100,000 Normal 75,000 Severe |
| **Trooper II** | | | |
| 1984-87 | *2.2L 4-Cyl. Diesel | T075 | 60,000 |
| 1986-87 | *2.3L 4-Cyl. | T122 | 60,000 |
| 1988-89 | *2.6L 4-Cyl. | T147 | 60,000 |
| **VehiCROSS** | | | |
| 1999-01 | 3.5L V6 | T303 | 100,000 Normal 75,000 Severe |
| **KIA** | | | |
| **Passenger Cars** | | | |
| **Sephia** | | | |
| 1994-95 | *1.6L 4-Cyl. (SOHC) | T185 | 105,000 (Calif.) |
| 1994-95 | *1.6L 4-Cyl. (SOHC) | T185 | 60,000 (Exc. Calif.) |
| 1996-97 | *1.6L 4-Cyl. (DOHC) | T179[3] | 105,000 (Calif.) |
| 1996-97 | *1.6L 4-Cyl. (DOHC) | T179[3] | 60,000 (Exc. Calif.) |
| 1995-97 | *1.8L 4-Cyl. (DOHC) | T179[3] | 105,000 (Calif.) |
| 1995-97 | *1.8L 4-Cyl. (DOHC) | T179[3] | 60,000 (Exc. Calif.) |
| 1998-01 | *1.8L 4-Cyl. (DOHC) | T302 | 105,000 (Calif.) |
| 1998-01 | *1.8L 4-Cyl. (DOHC) | T302 | 60,000 (Exc. Calif.) |
| 1996-97 | *1.8L 4-Cyl. (SOHC) | T185 | 105,000 (Calif.) |
| 1996-97 | *1.8L 4-Cyl. (SOHC) | T185 | 60,000 (Exc. Calif.) |
| **Spectra** | | | |
| 2000-01 | *1.8L 4-Cyl. (DOHC) | T302 | 105,000 (Calif.) |
| 2000-01 | *1.8L 4-Cyl. (DOHC) | T302 | 60,000 (Exc. Calif.) |
| **Light Trucks** | | | |
| **Sportage** | | | |
| 1995-01 | *2.0L 4-Cyl. (DOHC) | T281 | 105,000 (Calif.) |
| 1995-01 | *2.0L 4-Cyl. (DOHC) | T281 | 60,000 (Exc. Calif.) |
| 1995 | *2.0L 4-Cyl. (SOHC) | T264 | 105,000 (Calif.) |
| 1995 | *2.0L 4-Cyl. (SOHC) | T264 | 60,000 (Exc. Calif.) |
| **LANCIA** | | | |
| **Beta** | | | |
| 1976-78 | *1.8L 4-Cyl. | T020 | 25,000 |
| **LEXUS** | | | |
| **ES250** | | | |
| 1990-91 | 2.5L V6 | T157 | 60,000[1] |
| **ES300** | | | |
| 1992-93 | 3.0L V6 | T200 | 60,000[1] |
| 1994-98 | 3.0L V6 | T257 | 60,000[1] |
| 1999-01 | 3.0L V6 | T257 | 90,000 |
| **GS300** | | | |
| 1993-97 | 3.0L 6-Cyl. | T215 | 60,000[1] |
| 1998-01 | 3.0L 6-Cyl. | T215 | 90,000 |
| **GS400** | | | |
| 1998-00 | 4.0L V8 | T298 | 90,000 |
| **LS400** | | | |
| 1990-94 | 4.0L V8 | T190 | 60,000[1] |
| 1995-97 | 4.0L V8 | T190 | 90,000, Normal 60,000, Severe |
| 1998-00 | 4.0L V8 | T298 | 90,000 |
| **SC300** | | | |
| 1993-97 | 3.0L 6-Cyl. | T215 | 60,000[1] |
| 1998-00 | 3.0L 6-Cyl. | T215 | 90,000 |
| **SC400** | | | |
| 1992-94 | 4.0L V8 | T190 | 60,000[1] |
| 1995-97 | 4.0L V8 | T190 | 90,000, Normal 60,000, Severe |
| 1998-00 | 4.0L V8 | T298 | 90,000 |
| **Light Trucks** | | | |
| **LX470** | | | |
| 1998-01 | *4.7L V8 | T298 | 90,000 |
| **RX-300** | | | |
| 1999-01 | 3.0L V6 | T257 | 90,000 |
| **MAZDA** | | | |
| **Passenger Cars** | | | |
| **Miata & MX-5 Miata** | | | |
| 1990-92 | 1.6L 4-Cyl. (DOHC) | T179[3] | 60,000 |
| 1993 | 1.6L 4-Cyl. (DOHC) | T179[3] | 60,000 Federal 105,000 Calif. |
| 1994-96 | 1.8L 4-Cyl. (DOHC) | T179[3] | 60,000 Federal 105,000 Calif. |
| 1997-00 | 1.8L 4-Cyl. (DOHC) | T179[3] | 105,000 |
| 1997-00 | 1.8L 4-Cyl. (DOHC) | T179[3] | 60,000 |
| 2001 | 1.8L 4-Cyl. (DOHC) | T179[3] | 60,000 |
| **Millenia** | | | |
| 1995-96 | 2.3L V6 (Miller Cycle) | T267 | 60,000 Federal 105,000 Federal |
| 1997-00 | 2.3L V6 (Miller Cycle) | T267 | 105,000 |
| 1997-00 | 2.3L V6 (Miller Cycle) | T267 | 60,000 |
| 1995-96 | 2.5L V6 | T214 | 60,000 Federal 105,000 Federal |
| 1997-00 | 2.5L V6 | T214 | 105,000 |
| 1997-00 | 2.5L V6 | T214 | 60,000 |
| 2001 | 2.5L V6 | T214 | 105,000 |
| **MX-3 (Includes Canadian)** | | | |
| 1988-89 | 1.6L 4-Cyl. (DOHC) | T149 | 60,000 |
| 1994-95 | 1.6L 4-Cyl. (DOHC) | T179[3] | 60,000 Federal 105,000 Calif. |
| 1992 | 1.6L 4-Cyl. (SOHC) | T185 | 60,000 |
| 1993 | 1.6L 4-Cyl. (SOHC) | T185 | 60,000 Federal 105,000 Calif. |
| 1992 | 1.8L V6 | T214 | 60,000 |

* - Interference Engine. Other interference engine applications may exist which are not listed here. See page 19 for interference engine cautions.

[1] - Although the vehicle manufacturer does not recommend a specific scheduled maintenance interval, belt manufacturers suggest the belt be replaced at 60,000 miles intervals.

[2] - The vehicle manufacturer recommends replacing all belts at the same time.

[3] - A timing belt component kit is available for this application.

# Timing Belt Replacement Recommendations

| Make/ Model Year | Engine | Belt Part No. | Recommended Replacement (Miles) |
|---|---|---|---|
| **MAZDA (Cont.)** | | | |
| **MX-3 (Includes Canadian) (continued)** | | | |
| 1993-95 | 1.8L V6 | T214 | 60,000 Federal 105,000 Calif. |
| **MX-6** | | | |
| 1993 | *2.0L 4-Cyl. (DOHC) | T228[3] | 60,000 |
| 1994-96 | *2.0L 4-Cyl. (DOHC) | T228[3] | 60,000 Federal 105,000 Calif. |
| 1997 | *2.0L 4-Cyl. (DOHC) | T228[3] | 105,000 |
| 1997 | *2.0L 4-Cyl. (DOHC) | T228[3] | 60,000 |
| 1988-92 | *2.2L 4-Cyl. | T134[3] | 60,000 |
| 1993 | 2.5L V6 | T214 | 60,000 |
| 1994-96 | 2.5L V6 | T214 | 60,000 Federal 105,000 Federal |
| 1997 | 2.5L V6 | T214 | 105,000 |
| 1997 | 2.5L V6 | T214 | 60,000 |
| **Protege** | | | |
| 1995-97 | 1.5L 4-Cyl. | T266 | 60,000 (Ex. CA & MA) |
| 1995-97 | 1.5L 4-Cyl. | T266 | 105,000 (CA & MA) |
| 1998 | 1.5L 4-Cyl. | | |
| | Up To Eng. No. 19472 | T266 | 60,000 (Ex. CA & MA) 105,000 (CA & MA) |
| | From Eng. No. 19473 | T308 | 60,000 (Ex. CA & MA) 105,000 (CA & MA) |
| 1999-00 | 1.6L 4-Cyl. (DOHC) | T308 | 60,000 |
| 2001 | 1.6L 4-Cyl. (DOHC) | T308 | 105,000 |
| 1990-92 | 1.8L 4-Cyl. (DOHC) | T179 | 60,000 |
| 1993-95 | 1.8L 4-Cyl. (DOHC) | T179[3] | 60,000 Federal 105,000 Calif. |
| 1995-96 | 1.8L 4-Cyl. (DOHC) | T179[3] | 60,000 Federal 105,000 Calif. |
| 1997-98 | 1.8L 4-Cyl. (DOHC) | T179[3] | 60,000 |
| 1997-98 | 1.8L 4-Cyl. (DOHC) | T179[3] | 105,000 |
| 1999-00 | 1.8L 4-Cyl. (DOHC) | T316 | 60,000 |
| 1999-00 | 1.8L 4-Cyl. (DOHC) | T316 | 105,000 |
| 1990-92 | 1.8L 4-Cyl. (SOHC) | T185 | 60,000 |
| 1993-94 | 1.8L 4-Cyl. (SOHC) | T185 | 60,000 Federal 105,000 Calif. |
| 2001 | *2.0L 4-Cyl. (DOHC) | T228[3] | 105,000 |
| **323** | | | |
| 1988-89 | 1.6L 4-Cyl. (DOHC) | T149 | 60,000 |
| 1986 | 1.6L 4-Cyl. (SOHC) | T123 | 60,000 |
| 1987-89 | *1.6L 4-Cyl. (SOHC) | T141[3] | 60,000 |
| 1990-92 | 1.8L 4-Cyl. (SOHC) | T185 | 60,000 |
| 1993-94 | 1.6L 4-Cyl. (SOHC) | T185 | 60,000 Federal 105,000 Calif. |
| **626** | | | |
| 1983 | *2.0L 4-Cyl. (SOHC) | T088 | 60,000 |
| 1984-85 | 2.0L 4-Cyl. | | |
| | *Square Tooth Sprocket | T088 | 60,000 |
| | *Round Tooth Sprocket | T113 | 60,000 |
| 1986-87 | *2.0L 4-Cyl. | T117 | 60,000 |
| 1984-85 | 2.0L 4-Cyl. Diesel | | |
| | *Camshaft | T103 | 100,000 |
| | *Injection Pump | T102 | 100,000 |
| 1993 | *2.0L 4-Cyl. (DOHC) | T228[3] | 60,000 |
| 1994-96 | *2.0L 4-Cyl. (DOHC) | T228[3] | 60,000 Federal 105,000 Calif. |
| 1997-00 | *2.0L 4-Cyl. (DOHC) | T228[3] | 105,000 |
| 1997-00 | *2.0L 4-Cyl. (DOHC) | T228[3] | 60,000 |
| 2001 | *2.0L 4-Cyl. (DOHC) | T228[3] | 105,000 |
| 1988-92 | *2.2L 4-Cyl. | T134[3] | 60,000 |
| 1993 | 2.5L V6 | T214 | 60,000 |
| 1994-96 | 2.5L V6 | T214 | 60,000 Federal 105,000 Federal |
| **MAZDA (Cont.)** | | | |
| **626 (continued)** | | | |
| 1997-00 | 2.5L V6 | T214 | 105,000 |
| 1997-00 | 2.5L V6 | T214 | 60,000 |
| 2001 | 2.5L V6 | T214 | 105,000 |
| **929** | | | |
| 1990-93 | *3.0L V6 (DOHC) | T183 | 60,000 |
| 1994-95 | *3.0L V6 (DOHC) | T183 | 60,000 Federal 105,000 Calif. |
| 1988-91 | *3.0L V6 (SOHC) | T146[3] | 60,000 |
| **Light Trucks** | | | |
| **B2000** | | | |
| 1986 | 2.0L 4-Cyl. (SOHC) | | |
| | *Up To Chas. 568707 | T113 | 60,000 |
| | *From Chas. 568708 | T117 | 60,000 |
| 1987 | *2.0L 4-Cyl. (SOHC) | T117 | 60,000 |
| **B2200** | | | |
| 1987-93 | *2.2L 4-Cyl. | T134[3] | 60,000 |
| **B2300** | | | |
| 1994 | 2.3L 4-Cyl. | T210 | 60,000 |
| 1997-95 | 2.3L 4-Cyl. | T276 | 60,000 |
| **B2500** | | | |
| 1998-00 | 2.5L 4-Cyl. | T276 | 120,000 |
| **MPV** | | | |
| 1988-93 | *3.0L V6 (SOHC) | T146[3] | 60,000 |
| 1994-96 | *3.0L V6 (SOHC) | T146[3] | 60,000 Federal 105,000 Calif. |
| 1997-98 | *3.0L V6 (SOHC) | T146[3] | 105,000 |
| 1997-98 | *3.0L V6 (SOHC) | T146[3] | 60,000 |
| **Tribute** | | | |
| 2001 | 2.0L 4-Cyl. (DOHC) | T294 | 120,000 |
| **MERCURY** | | | |
| **Passenger Cars** | | | |
| **Bobcat** | | | |
| 1974-80 | 2.3L 4-Cyl. | T014[3] | 60,000[1] |
| **Capri** | | | |
| 1972 | 1.6L 4-Cyl. | T013 | 60,000[1] |
| 1971-74 | 2.0L 4-Cyl. | T013 | 60,000[1] |
| 1991-94 | 1.6L 4-Cyl. (DOHC) | T179[3] | 60,000 |
| 1976-86 | 2.3L 4-Cyl. | T014[3] | 60,000[1] |
| **Cougar** | | | |
| 1981-86 | 2.3L 4-Cyl. | T014[3] | 60,000[1] |
| 1998-00 | 2.0L 4-Cyl. (DOHC, VIN 3) | T294 | Inspect at 120,000, Replace if needed. |
| 2001 | 2.0L 4-Cyl. (DOHC, VIN 3) | T294 | 120,000 |
| **LN7** | | | |
| 1981-85 | *1.6L 4-Cyl. (SOHC) | T067[3] | 60,000 |
| 1981-85 | *1.6L 4-Cyl. (SOHC) | T067[3] | 60,000 |
| 1985-87 | *1.9L 4-Cyl. | T067[3] | 60,000 |
| 1984-87 | 2.0L 4-Cyl. Diesel | | |
| | *Camshaft | T103 | 100,000[2] |
| | *Injection Pump | T102 | 100,000[2] |
| **Marquis** | | | |
| 1983-86 | *2.3L 4-Cyl. | T014 | 60,000[1] |
| **Mystique** | | | |
| 1995-97 | 2.0L 4-Cyl. (DOHC, VIN 3) | T258 | 60,000[1] |
| 1998-00 | 2.0L 4-Cyl. (DOHC, VIN 3) | T294 | Inspect at 120,000, Replace if needed. |
| **Topaz** | | | |
| 1984-86 | 2.0L 4-Cyl. Diesel | | |
| | *Camshaft | T103 | 100,000[2] |
| | *Injection Pump | T102 | 100,000[2] |
| **Tracer** | | | |
| 1987-90 | *1.6L 4-Cyl. (SOHC) | T141[3] | 60,000 |

* - Interference Engine. Other interference engine applications may exist which are not listed here. See page 19 for interference engine cautions.

[1] - Although the vehicle manufacturer does not recommend a specific scheduled maintenance interval, belt manufacturers suggest the belt be replaced at 60,000 miles intervals.

[2] - The vehicle manufacturer recommends replacing all belts at the same time.

[3] - A timing belt component kit is available for this application.

# Timing Belt Replacement Recommendations

| Make/ Model Year | Engine | Belt Part No. | Recommended Replacement (Miles) |
|---|---|---|---|
| **MERCURY (Cont.)** | | | |
| **Tracer (continued)** | | | |
| 1991-96 | 1.8L 4-Cyl. (DOHC) | T179[3] | 60,000 |
| 1991 | 1.9L 4-Cyl. | | |
| | *Before 3/25/1991 | T067[3] | 60,000 |
| | *After 3/26/1991 | T194[3] | 60,000 |
| 1992-96 | *1.9L 4-Cyl. | T194[3] | 60,000 |
| 1997-00 | 2.0L 4-Cyl. (SOHC, VIN P) | T283 | Inspect at 120,000, Replace if needed. |
| 2001 | 2.0L 4-Cyl. (SOHC, VIN P) | T283 | 120,000 |
| **Zephyr** | | | |
| 1978-83 | 2.3L 4-Cyl. | T014[3] | 60,000[1] |
| **Light Trucks** | | | |
| **Villager** | | | |
| 1993 | *3.0L V6 (SOHC) | T104[3] | 105,000 |
| 1994-98 | *3.0L V6 (SOHC) | T249 | 105,000 |
| **MERKUR** | | | |
| **XR4Ti** | | | |
| 1985-89 | 2.3L 4-Cyl. | T014[3] | 60,000[1] |
| **MITSUBISHI** | | | |
| **Passenger Cars** | | | |
| **Cordia & Tredia** | | | |
| 1983-84 | 1.8L 4-Cyl. | | |
| | Balance Shaft | T090 | 60,000[2] |
| | Camshaft | T089 | 60,000[2] |
| 1985-86 | 1.8L 4-Cyl. | | |
| | Balance Shaft | T159 | 60,000[2] |
| | Camshaft | T089 | 60,000[2] |
| 1987-88 | 1.8L 4-Cyl. | | |
| | Balance Shaft | T159[3] | 60,000[2] |
| | Camshaft | T158[3] | 60,000[2] |
| 1984 | 2.0L 4-Cyl. | | |
| | Balance Shaft | T090 | 60,000[2] |
| | Camshaft | T089 | 60,000[2] |
| 1985-86 | 2.0L 4-Cyl. | | |
| | Balance Shaft | T159 | 60,000[2] |
| | Camshaft | T089 | 60,000[2] |
| 1987-88 | 2.0L 4-Cyl. | | |
| | Balance Shaft | T159 | 60,000[2] |
| | Camshaft | T158 | 60,000[2] |
| **Diamante** | | | |
| 1992-93 | *3.0L V6 (DOHC) | T195 | 60,000 |
| 1994-96 | *3.0L V6 (DOHC) | T195 | 60,000 |
| 1992-93 | 3.0L V6 (SOHC, 12-Valve) | T139[3] | 60,000 |
| 1994-96 | 3.0L V6 (SOHC, 12-Valve) | T139[3] | 60,000 Federal 100,000 Calif. |
| 1997-01 | *3.5L V6 (SOHC) | T287 | 60,000 |
| **Eclipse** | | | |
| 1990-94 | 1.8L 4-Cyl. | | |
| | Balance Shaft | T159[3] | 60,000[2] |
| | Camshaft | T158[3] | 60,000[2] |
| 1995-97 | 2.0L 4-Cyl. (Non-Turbo) | | |
| | *DOHC, VIN Y | T246 | 60,000 Federal 100,000 Calif. |
| 1998-99 | *2.0L 4-Cyl. (Non-Turbo) | | |
| | DOHC, VIN Y | T246 | 60,000 |
| 1990-94 | 2.0L 4-Cyl. (DOHC) | | |
| | *Balance Shaft | T168[3] | 60,000[2] |
| | *Camshaft | T167[3] | 60,000[2] |
| **MITSUBISHI (Cont.)** | | | |
| **Eclipse (continued)** | | | |
| 1995-97 | 2.0L 4-Cyl. (DOHC) Turbo | | |
| | *Balance Shaft | T168[3] | 60,000 Federal[2] 100,000 Calif.[2,] |
| | *Camshaft | T167[3] | 60,000 Federal[2,] 100,000 Calif.[2,] |
| 1998-99 | 2.0L 4-Cyl. (DOHC) Turbo | | |
| | *Balance Shaft | T168[3] | 60,000[2,] 100,000[2,] |
| | *Camshaft | T167[3] | 60,000[2,] 100,000[2,] |
| 1996 | 2.4L 4-Cyl. (SOHC, VIN G) | | |
| | *Balance Shaft | T168 | 60,000 Federal[2] 100,000 Calif.[2] |
| | *Camshaft | T230 | 60,000 Federal[2] 100,000 Calif.[2] |
| 1997-98 | 2.4L 4-Cyl. (SOHC, VIN G) | | |
| | *Balance Shaft | T168 | 60,000[2,] |
| | *Camshaft | T230 | 60,000[2] |
| 2000-01 | 2.4L 4-Cyl. (SOHC, VIN G) | | |
| | *Balance Shaft | T168 | 60,000[2,] |
| | *Camshaft | T232 | 60,000[2,] |
| 2000-01 | *3.0L V6 (SOHC, 24-Valve) | T259 | 60,000 |
| **Expo & Expo LRV** | | | |
| 1992-93 | 1.8L 4-Cyl. (VINs C & D) | T201 | 60,000 |
| 1994 | 1.8L 4-Cyl. (VINs C & D) | T201 | 60,000 Federal 100,000 California |
| 1992 | 2.4L 4-Cyl. | | |
| | Balance Shaft | T159 | 60,000[2] |
| | Camshaft | T204 | 60,000[2] |
| 1993-95 | 2.4L 4-Cyl. | | |
| | Balance Shaft | T168 | 60,000[2] |
| | Camshaft | T230 | 60,000[2] |
| **Galant** | | | |
| 1989-92 | 2.0L 4-Cyl. | | |
| | Balance Shaft | T159[3] | 60,000[2] |
| | Camshaft | T155[3] | 60,000[2] |
| 1993 | 2.0L 4-Cyl. | | |
| | Balance Shaft | T168[3] | 60,000[2] |
| | Camshaft | T232[3] | 60,000[2] |
| 1989-92 | 2.0L 4-Cyl. (DOHC) | | |
| | *Balance Shaft | T168[3] | 60,000[2] |
| | *Camshaft | T167[3] | 60,000[2] |
| 1993 | 2.0L 4-Cyl. (DOHC) | | |
| | *Balance Shaft | T168[3] | 60,000[2] |
| | *Camshaft | T232[3] | 60,000[2] |
| 1994 | 2.4L 4-Cyl. (DOHC) | | |
| | *Balance Shaft | T168 | 60,000 Federal 100,000 Calif. |
| | Camshaft | | |
| | *Up To May, 1994 | T256[3] | 60,000 Federal 100,000 Calif. |
| | *From June, 1994 | T230 | 60,000 Federal 100,000 Calif. |
| 1995-96 | 2.4L 4-Cyl. (DOHC) | | |
| | *Balance Shaft | T168 | 60,000 Federal 100,000 Calif. |
| | *Camshaft | T230 | 60,000 Federal 100,000 Calif. |
| 1985-87 | 2.4L 4-Cyl. (SOHC) | | |
| | Balance Shaft | T159[3] | 60,000[2] |
| | Camshaft | T124[3] | 60,000[2] |

* - Interference Engine. Other interference engine applications may exist which are not listed here. See page 19 for interference engine cautions.

[1] - Although the vehicle manufacturer does not recommend a specific scheduled maintenance interval, belt manufacturers suggest the belt be replaced at 60,000 miles intervals.

[2] - The vehicle manufacturer recommends replacing all belts at the same time.

[3] - A timing belt component kit is available for this application.

# Timing Belt Replacement Recommendations

| Make/ Model Year | Engine | Belt Part No. | Recommended Replacement (Miles) |
|---|---|---|---|
| **MITSUBISHI (Cont.)** | | | |
| **Galant (continued)** | | | |
| 1994-96 | 2.4L 4-Cyl. (SOHC, VIN G) | | |
| | *Balance Shaft | T168 | 60,000 Federal[2] 100,000 Calif.[2] |
| | *Camshaft | T230 | 60,000 Federal[2] 100,000 Calif.[2] |
| 1997-98 | 2.4L 4-Cyl. (SOHC, VIN G) | | |
| | *Balance Shaft | T168 | 60,000[2] |
| | *Camshaft | T230 | 60,000[2] |
| 1999-01 | 2.4L 4-Cyl. (SOHC, VIN G) | | |
| | *Balance Shaft | T168 | 60,000[2] |
| | *Camshaft | T232 | 60,000[2] |
| 1988 | 3.0L V6 (SOHC, 12-Valve) | T139[3] | 60,000 |
| 1999-01 | *3.0L V6 (SOHC, 24-Valve) | T259 | 60,000 |
| **Mirage** | | | |
| 1985-86 | *1.5L 4-Cyl. | T073 | 60,000 |
| 1987-90 | *1.5L 4-Cyl. | T128[3] | 60,000 |
| 1991-93 | *1.5L 4-Cyl. | T191 | 60,000 |
| 1994-96 | *1.5L 4-Cyl. | T191[3] | 60,000 Federal 60,000 Calif. |
| 1997-01 | *1.5L 4-Cyl. | T289 | 100,000 |
| 1997-01 | *1.5L 4-Cyl. | T289 | 60,000 |
| 1985-88 | *1.6L 4-Cyl. (SOHC) | T093 | 60,000 |
| 1989-92 | *1.6L 4-Cyl. (DOHC) | T165 | 60,000 |
| 1993 | 1.8L 4-Cyl. (VINs C & D) | T201 | 60,000 |
| 1994-96 | 1.8L 4-Cyl. (VINs C & D) | T201 | 60,000 Federal 100,000 Calif. |
| 1997-00 | 1.8L 4-Cyl. | T288 | 100,000 |
| 1997-00 | 1.8L 4-Cyl. | T288 | 60,000 |
| **Precis** | | | |
| 1987-89 | *1.5L 4-Cyl. | T073 | 60,000 |
| 1990-93 | *1.5L 4-Cyl. | T128[3] | 60,000 |
| **Sigma** | | | |
| 1989-90 | 3.0L V6 (SOHC, 12-Valve) | T139[3] | 60,000 |
| **Tredia (See Cordia)** | | | |
| **3000GT** | | | |
| 1991-93 | *3.0L V6 (DOHC) | T195 | 60,000 |
| 1992-98 | *3.0L V6 (DOHC) | T195 | 60,000 |
| 1997-98 | 3.0L V6 (SOHC, 12-Valve) | T139[3] | 60,000 |
| **Light Trucks** | | | |
| **Montero** | | | |
| 1989-93 | 3.0L V6 (SOHC, 12-Valve) | T139[3] | 60,000 |
| 1994 | 3.0L V6 (SOHC, 12-Valve) | T139[3] | 60,000 Federal 100,000 Calif. |
| 1995-96 | *3.0L V6 (SOHC, 24-Valve) | T259 | 60,000 Federal 100,000 Calif. |
| 1994-96 | *3.5L V6 (DOHC) | T253 | 60,000 Federal 100,000 Calif. |
| 1997-00 | *3.5L V6 (SOHC) | T287 | 60,000 |
| **Montero Sport** | | | |
| 1997-98 | 2.4L 4-Cyl. (SOHC, VIN G) | | |
| | *Balance Shaft | T168 | 60,000[2] |
| | *Camshaft | T230 | 60,000[2] |
| 1999 | 2.4L 4-Cyl. (SOHC, VIN G) | | |
| | *Balance Shaft | T168 | 60,000[2] |
| | *Camshaft | T232 | 60,000[2] |
| 1997-01 | *3.0L V6 (SOHC, 24-Valve) | T259 | 60,000 |
| 1997-01 | *3.5L V6 (SOHC) | T287 | 60,000 |
| **Pickup** | | | |
| 1983-86 | 2.0L 4-Cyl. | | |
| | Balance Shaft | T090 | 60,000[2] |
| | Camshaft | T089 | 60,000[2] |
| **MITSUBISHI (Cont.)** | | | |
| **Pickup (continued)** | | | |
| 1987-89 | 2.0L 4-Cyl. | | |
| | Balance Shaft | T159[3] | 60,000[2] |
| | Camshaft | T158[3] | 60,000[2] |
| 1983-86 | 2.3L 4-Cyl. Diesel | | |
| | *Balance Shaft | T092 | 50,000[2] |
| | *Camshaft | T091 | 50,000[2] |
| 1990-92 | 2.4L 4-Cyl. | | |
| | Balance Shaft | T159[3] | 60,000[2] |
| | Camshaft | T124[3] | 60,000[2] |
| 1993-96 | 2.4L 4-Cyl. | | |
| | Balance Shaft | T168 | 60,000[2] |
| | Camshaft | T229 | 60,000[2] |
| 1990-93 | 3.0L V6 (SOHC, 12-Valve) | T139[3] | 60,000 |
| 1994 | 3.0L V6 (SOHC, 12-Valve) | T139[3] | 60,000 Federal 100,000 Calif. |
| **Van** | | | |
| 1987-90 | 2.4L 4-Cyl. (SOHC) | | |
| | Balance Shaft | T159[3] | 60,000[2] |
| | Camshaft | T124[3] | 60,000[2] |
| **NISSAN** | | | |
| **Passenger Cars** | | | |
| **Maxima** | | | |
| 1985 | *3.0L V6 (SOHC) | T104[3] | |
| 1996-91 | *3.0L V6 (SOHC) | T104[3] | 60,000 |
| 1992-94 | 3.0L V6 (SOHC) | | |
| | *Round Tooth Sprocket | T249 | 60,000 |
| | *Square Tooth Sprocket | T104[3] | 60,000 |
| **Pulsar & Pulsar NX** | | | |
| 1983-84 | *1.5L 4-Cyl. | T077[3] | 60,000[1] |
| 1987 | *1.6L 4-Cyl. (DOHC) | T137 | 60,000 |
| 1983-88 | *1.6L 4-Cyl. (SOHC) | T077[3] | 60,000[1] |
| 1988-89 | *1.8L 4-Cyl. (DOHC) | T137[3] | 60,000 |
| **Sentra** | | | |
| 1982-83 | *1.5L 4-Cyl. | T077[3] | 60,000[1] |
| 1983-88 | *1.6L 4-Cyl. (SOHC) | T077[3] | 60,000[1] |
| 1983-87 | 1.7L 4-Cyl. Diesel | | |
| | *Camshaft | T096 | 60,000[1] |
| | *Injection Pump | T097 | 60,000[1] |
| **Stanza** | | | |
| 1982-85 | *2.0L 4-Cyl. | T078 | 60,000[1] |
| 1986-89 | *2.0L 4-Cyl. | T078 | 60,000 |
| **Stanza Wagon** | | | |
| 1989-86 | *2.0L 4-Cyl. | T078 | |
| **200SX** | | | |
| 1984-85 | 1.8L 4-Cyl. (Turbo) | T100 | 60,000[1] |
| 1986-87 | 1.8L 4-Cyl. (Turbo) | T100 | 60,000 |
| 1984-85 | *2.0L 4-Cyl. | T078 | 60,000[1] |
| 1986-88 | *2.0L 4-Cyl. | T078 | 60,000 |
| 1987-88 | *3.0L V6 (SOHC) | T104[3] | 60,000 |
| **300ZX** | | | |
| 1984-85 | *3.0L V6 (SOHC) | T104[3] | 60,000[1] |
| 1986-89 | *3.0L V6 (SOHC) | T104[3] | 60,000 |
| 1990-93 | *3.0L V6 (DOHC) | T180 | 60,000 |
| 1994-96 | *3.0L V6 (DOHC) | T251 | 60,000 |
| **310** | | | |
| 1982 | *1.5L 4-Cyl. | T077[3] | 60,000[1] |
| **Light Trucks** | | | |
| **Frontier** | | | |
| 1999-01 | 3.3L V6 (SOHC) | T249 | 105,000 |
| **Pathfinder** | | | |
| 1986-92 | *3.0L V6 (SOHC) | T104[3] | 60,000 |

* - Interference Engine. Other interference engine applications may exist which are not listed here. See page 19 for interference engine cautions.

[1] - Although the vehicle manufacturer does not recommend a specific scheduled maintenance interval, belt manufacturers suggest the belt be replaced at 60,000 miles intervals.

[2] - The vehicle manufacturer recommends replacing all belts at the same time.

[3] - A timing belt component kit is available for this application.

# Timing Belt Replacement Recommendations

| Make/ Model Year | Engine | Belt Part No. | Recommended Replacement (Miles) |
|---|---|---|---|
| **NISSAN (Cont.)** | | | |
| **Pathfinder (continued)** | | | |
| 1993-94 | 3.0L V6 (SOHC) | | |
| | *Round Tooth Sprocket | T249 | 60,000 |
| | *Square Tooth Sprocket | T104[3] | 60,000 |
| 1995-96 | *3.0L V6 (SOHC) | T249 | 60,000 |
| 1999-00 | *3.3L V6 (SOHC) | T249 | 105,000 |
| **Pickup** | | | |
| 1986-92 | *3.0L V6 (SOHC) | T104[3] | 60,000 |
| 1993-94 | 3.0L V6 (SOHC) | | |
| | *Round Tooth Sprocket | T249 | 60,000 |
| | *Square Tooth Sprocket | T104[3] | 60,000 |
| 1995-96 | *3.0L V6 (SOHC) | T249 | 60,000 |
| **Quest** | | | |
| 1993-94 | 3.0L V6 (SOHC) | | |
| | *Round Tooth Sprocket | T249 | 60,000 |
| | *Square Tooth Sprocket | T104[3] | 60,000 |
| 1995-98 | *3.0L V6 (SOHC) | T249 | 60,000 |
| 1999-01 | 3.3L V6 (SOHC) | T249 | 105,000 |
| **Xterra** | | | |
| 2000-01 | 3.3L V6 (SOHC) | T249 | 105,000 |
| **OLDSMOBILE** | | | |
| **Cutlass Supreme** | | | |
| 1991-95 | *3.4L V6 | T192 | 60,000 |
| 1996 | *3.4L V6 | T273 | 60,000 |
| **Firenza** | | | |
| 1982-86 | 1.8L 4-Cyl. | T081 | 60,000[1] |
| 1987-88 | 2.0L 4-Cyl. | T081 | 60,000[1] |
| **PEUGEOT** | | | |
| **405** | | | |
| 1989-91 | 1.9L 4-Cyl. (DOHC) | T188 | 60,000[1] |
| 1991-89 | 1.9L 4-Cyl. (SOHC) | T189 | 60,000[1] |
| **505** | | | |
| 1986-91 | 2.2L 4-Cyl. (Exc. Turbo) | T140 | 60,000[1] |
| **PLYMOUTH** | | | |
| **Passenger Cars** | | | |
| **Acclaim** | | | |
| 1985-89 | 2.5L 4-Cyl. | T153[3] | 60,000[1] |
| 1989-93 | 3.0L V6 (SOHC) | T139[3] | 60,000 |
| 1994-95 | 3.0L V6 (SOHC) | T139[3] | 60,000 |
| **Arrow** | | | |
| 1978-80 | 1.6L 4-Cyl. w/o Bal. Shaft | T064 | 60,000 |
| 1977-80 | 1.6L 4-Cyl. | | |
| | Balance Shaft | T062 | 60,000[2] |
| | Camshaft | T013 | 60,000[2] |
| **Breeze** | | | |
| 1996-00 | *2.0L 4-Cyl. (SOHC, VIN C) | T245 | 100,000 Federal 105,000 Calif. |
| 1996-99 | 2.4L 4-Cyl. (DOHC, VIN X) | T265 | 105,000 |
| 2000 | 2.4L 4-Cyl. (DOHC, VIN X) | T265 | 100,000 Federal 105,000 Calif. |
| **Caravelle** | | | |
| 1983-88 | 2.2L 4-Cyl. | T071[3] | 60,000[1] |
| 1986-87 | 2.5L 4-Cyl. | T114 | 60,000[1] |
| 1988 | 2.5L 4-Cyl. | T132 | 60,000[1] |
| **Champ** | | | |
| 1979-82 | *1.4L 4-Cyl. | T073 | 60,000 |
| 1979-82 | 1.6L 4-Cyl. w/o Bal. Shaft | T064 | 60,000 |
| 1979-80 | 1.6L 4-Cyl. | | |
| | Balance Shaft | T062 | 60,000[2] |
| | Camshaft | T013 | 60,000[2] |
| **PLYMOUTH (Cont.)** | | | |
| **Colt** | | | |
| 1979-84 | *1.4L 4-Cyl. | T073 | 60,000 |
| 1985-86 | *1.5L 4-Cyl. | T073 | 60,000 |
| 1987-90 | *1.5L 4-Cyl. | T128[3] | 60,000 |
| 1991-94 | 1.5L 4-Cyl. | T191[3] | 60,000 |
| 1978-79 (RWD) | 1.6L 4-Cyl. w/o Bal. Shaft | T064 | 60,000 |
| 1979-82 (FWD) | 1.6L 4-Cyl. w/o Bal. Shaft | T064 | 60,000 |
| 1983-89 | 1.6L 4-Cyl. w/o Bal. Shaft | T093 | 60,000 |
| 1977-80 | 1.6L 4-Cyl. | | |
| | Balance Shaft | T062 | 60,000[2] |
| | Camshaft | T013 | 60,000[2] |
| 1989-90 | *1.6L 4-Cyl. (DOHC) | T165 | 60,000 |
| 1989-90 | 1.8L 4-Cyl. (VIN T) | T093 | 60,000 |
| 1992-94 | 1.8L 4-Cyl. (VINs C & D) | T201 | 60,000 |
| **Colt Vista (Includes Canadian)** | | | |
| 1992-94 | 1.8L 4-Cyl. (VINs C & D) | T201 | 60,000 |
| 1984-86 | 2.0L 4-Cyl. (SOHC) | | |
| | Balance Shaft | T090 | 60,000[2] |
| | Camshaft | T089 | 60,000[2] |
| 1987-91 | 2.0L 4-Cyl. (SOHC) | | |
| | Balance Shaft | T159[3] | 60,000[2] |
| | Camshaft | T158[3] | 60,000[2] |
| 1992 | 2.4L 4-Cyl. | | |
| | Balance Shaft | T159 | 60,000[2] |
| | Camshaft | T204 | 60,000[2] |
| 1993 | 2.4L 4-Cyl. | | |
| | Balance Shaft | T159 | 60,000[2] |
| | Camshaft | T230 | 60,000[2] |
| 1994 | 2.4L 4-Cyl. | | |
| | Balance Shaft | T168 | 60,000[2] |
| | Camshaft | T230 | 60,000[2] |
| **Colt 100 (Canadian)** | | | |
| 1989-90 | *1.6L 4-Cyl. (DOHC) | T165 | 60,000 |
| **Colt 200 (Canadian)** | | | |
| 1989-90 | *1.6L 4-Cyl. (DOHC) | T165 | 60,000 |
| **Horizon** | | | |
| 1978-83 | 1.7L 4-Cyl. | T017[3] | 60,000[1] |
| 1981-88 | 2.2L 4-Cyl. | T071[3] | 60,000[1] |
| 1989-90 | 2.2L 4-Cyl. | T153[3] | 60,000[1] |
| **Laser** | | | |
| 1990-94 | 1.8L 4-Cyl. | | |
| | Balance Shaft | T159[3] | 60,000[2] |
| | Camshaft | T158[3] | 60,000[2] |
| 1990-94 | 2.0L 4-Cyl. (DOHC) | | |
| | *Balance Shaft | T168[3] | 60,000[2] |
| | *Camshaft | T167[3] | 60,000[2] |
| **Neon** | | | |
| 1995-99 | *2.0L 4-Cyl. (DOHC, VIN Y) | T246 | 105,000 |
| 1995-00 | *2.0L 4-Cyl. (SOHC, VIN C) | T245 | 105,000 |
| **Reliant** | | | |
| 1981-88 | 2.2L 4-Cyl. | T071[3] | 60,000[1] |
| 1989 | 2.2L 4-Cyl. | T153[3] | 60,000[1] |
| 1986-87 | 2.5L 4-Cyl. | T114 | 60,000[1] |
| 1988 | 2.5L 4-Cyl. | T132 | 60,000[1] |
| 1989 | 2.5L 4-Cyl. | T153[3] | 60,000[1] |
| **Sapporo** | | | |
| 1978-80 | 1.6L 4-Cyl. w/o Bal. Shaft | T064 | 60,000 |
| 1977-80 | 1.6L 4-Cyl. | | |
| | Balance Shaft | T062 | 60,000[2] |
| | Camshaft | T013 | 60,000[2] |
| 1987-88 | 2.2L 4-Cyl. | T071[3] | 60,000[1] |
| 1989-94 | 2.2L 4-Cyl. | T153[3] | 60,000[1] |
| 1988 | 2.5L 4-Cyl. | T132 | 60,000[1] |

* - Interference Engine. Other interference engine applications may exist which are not listed here. See page 19 for interference engine cautions.

[1] - Although the vehicle manufacturer does not recommend a specific scheduled maintenance interval, belt manufacturers suggest the belt be replaced at 60,000 miles intervals.

[2] - The vehicle manufacturer recommends replacing all belts at the same time.

[3] - A timing belt component kit is available for this application.

# Timing Belt Replacement Recommendations

| Make/ Model Year | Engine | Belt Part No. | Recommended Replacement (Miles) |
|---|---|---|---|
| **PLYMOUTH (Cont.)** | | | |
| **Sundance** | | | |
| 1989-94 | 2.5L 4-Cyl. | T153[3] | 60,000[1] |
| 1992-93 | 3.0L V6 (SOHC) | T139[3] | 60,000 |
| 1994 | 3.0L V6 (SOHC) | T139[3] | 60,000 |
| **TC3** | | | |
| 1981-82 | 1.7L 4-Cyl. | T017[3] | 60,000[1] |
| 1981-82 | 2.2L 4-Cyl. | T071[3] | 60,000[1] |
| **Turismo** | | | |
| 1983 | 1.7L 4-Cyl. | T017[3] | 60,000[1] |
| 1983-87 | 2.2L 4-Cyl. | T071[3] | 60,000[1] |
| **Light Trucks** | | | |
| **(See DODGE/PLYMOUTH Light Trucks)** | | | |
| **PONTIAC** | | | |
| **Passenger Cars** | | | |
| **Acadian (Canadian)** | | | |
| 1976 | 1.4L 4-Cyl. | T037 | 60,000[1] |
| 1977 | 1.4L 4-Cyl. | T039 | 60,000[1] |
| 1976 | 1.6L 4-Cyl. | T037 | 60,000[1] |
| 1977-78 | 1.6L 4-Cyl. | T039 | 60,000[1] |
| 1979-87 | 1.6L 4-Cyl. | T061 | 60,000[1] |
| 1981-85 | *1.8L 4-Cyl. Diesel | T076 | 60,000[1] |
| **Firefly (Canadian)** | | | |
| 1985-88 | 1.0L 3-Cyl. | T095 | 60,000 |
| 1989-91 | 1.0L 3-Cyl. | T166 | 60,000 |
| 1994-95 | 1.0L 3-Cyl. | T243 | 60,000 |
| 1996-97 | 1.0L 3-Cyl. | T194[3] | 60,000 |
| 1998-00 | 1.0L 3-Cyl. | T194[3] | 100,000 |
| 1995-97 | 1.3L 4-Cyl. | T272 | 60,000 |
| 1998-00 | 1.3L 4-Cyl. | T194[3] | 100,000 |
| **Grand Am** | | | |
| 1987-88 | 2.0L 4-Cyl. | T081 | 60,000[1] |
| 1989 | 2.0L 4-Cyl. (Turbo) | T163[3] | 60,000[1] |
| **Grand Prix** | | | |
| 1991-95 | *3.4L V6 | T192 | 60,000 |
| 1996 | *3.4L V6 | T273 | 60,000 |
| **J2000** | | | |
| 1982 | 1.8L 4-Cyl. | T081 | 60,000[1] |
| **LeMans** | | | |
| 1988-89 | 1.6L 4-Cyl. | T148 | 60,000[1] |
| 1990 | 1.6L 4-Cyl. | | |
| | *With Tensioner | T203 | 60,000[1] |
| | *Without Tensioner | T148 | 60,000[1] |
| 1991-93 | *1.6L 4-Cyl. | T203 | 60,000[1] |
| 1989 | 2.0L 4-Cyl. | | |
| | First Design | T081 | 60,000[1] |
| | Second Design | T163[3] | 60,000[1] |
| 1990 | 2.0L 4-Cyl. | T163[3] | 60,000[1] |
| **Sunbird** | | | |
| 1985-86 | 1.8L 4-Cyl. | T081 | 60,000[1] |
| 1987-88 | 2.0L 4-Cyl. | T081 | 60,000[1] |
| 1989-94 | 2.0L 4-Cyl. | T163[3] | 60,000[1] |
| **Sunburst (Canadian)** | | | |
| 1985-88 | *1.5L 4-Cyl. | T162 | 60,000 |
| **T1000** | | | |
| 1981-82 | 1.6L 4-Cyl. | T061 | 60,000[1] |
| **1000** | | | |
| 1983-87 | 1.6L 4-Cyl. | T061 | 60,000[1] |
| **2000** | | | |
| 1983 | 1.8L 4-Cyl. | T081 | 60,000[1] |
| **2000 Sunbird** | | | |
| 1984 | 1.8L 4-Cyl. | T081 | 60,000[1] |

| Make/ Model Year | Engine | Belt Part No. | Recommended Replacement (Miles) |
|---|---|---|---|
| **PONTIAC (Cont.)** | | | |
| **Light Trucks** | | | |
| **Sunrunner (Canadian)** | | | |
| 1989-95 | 1.6L 4-Cyl. (8-Valve) | | |
| | California | T212 | 60,000[1] |
| | Except California | T164 | 60,000[1] |
| 1994-98 | 1.6L 4-Cyl. (16-Valve) | | |
| | California | T212 | 60,000 |
| | Except California | T164 | 60,000 |
| **PORSCHE** | | | |
| **924** | | | |
| 1977-82 | *2.0L 4-Cyl. | T017 | 45,000 |
| 1987-88 | 2.5L 4-Cyl. | | |
| | *Balance Shaft | T293 | 45,000 |
| | *Camshaft | T107 | 45,000 |
| **928** | | | |
| 1978-82 | *4.5L V8 | T196 | 60,000 |
| 1983-84 | *4.5L V8 | T196 | 60,000 |
| 1985-91 | *5.0L V8 | T196 | 60,000 |
| 1992-95 | *5.4L V8 | T196 | 60,000 |
| **944** | | | |
| 1983-89 | 2.5L 4-Cyl. | | |
| | *Balance Shaft | T293 | 45,000 |
| | *Camshaft | T107 | 45,000 |
| 1989 | 2.7L 4-Cyl. | | |
| | *Balance Shaft | T293 | 45,000 |
| | *Camshaft | T107 | 45,000 |
| 1989-91 | 3.0L 4-Cyl. | | |
| | *Balance Shaft | T293 | 45,000 |
| | *Camshaft | T152 | 45,000 |
| **944S & 944 Turbo** | | | |
| 1987-88 | 2.5L 4-Cyl. | | |
| | *Balance Shaft | T293 | 45,000 |
| | *Camshaft | T152 | 45,000 |
| **968** | | | |
| 1992-95 | 3.0L 4-Cyl. | | |
| | *Balance Shaft | T293 | 45,000 |
| | *Camshaft | T152 | 45,000 |
| **RENAULT** | | | |
| **Alliance & Encore** | | | |
| 1985-87 | *1.7L 4-Cyl. | T119 | 60,000[1] |
| **Fuego & Sportwagon** | | | |
| 1984-86 | 2.2L 4-Cyl. | T140 | 60,000[1] |
| **SAAB** | | | |
| **900** | | | |
| 1994-97 | *2.5L V6 | T285 | 60,000 |
| **9000** | | | |
| 1995-97 | *3.0L V6 | T285 | 60,000 |
| **SATURN** | | | |
| **L Series** | | | |
| 2000-01 | *3.0L V6 (DOHC) | T285 | 100,000 |
| **STERLING** | | | |
| **825** | | | |
| 1987-88 | *2.5L V6 | T129 | 60,000[1] |
| **827** | | | |
| 1989-91 | *2.7L V6 | T129 | 60,000[1] |

* - Interference Engine. Other interference engine applications may exist which are not listed here. See page 19 for interference engine cautions.

[1] - Although the vehicle manufacturer does not recommend a specific scheduled maintenance interval, belt manufacturers suggest the belt be replaced at 60,000 miles intervals.

[2] - The vehicle manufacturer recommends replacing all belts at the same time.

[3] - A timing belt component kit is available for this application.

# Timing Belt Replacement Recommendations

| Make/ Model Year | Engine | Belt Part No. | Recommended Replacement (Miles) |
|---|---|---|---|
| **SUBARU** | | | |
| **Coupe** | | | |
| 1985-89 | 1.8L 4-Cyl. | | |
| | Right Hand Belt | T300[3] | 52,000[2] |
| | Left Hand Belt | T299[3] | 52,000[2] |
| **Impreza & Outback Sport** | | | |
| 1993 | 1.8L 4-Cyl. | T172[3] | 60,000 |
| 1994 | 1.8L 4-Cyl. | T254 | 60,000 |
| 1995-97 | 1.8L 4-Cyl. | T254 | 60,000 Federal 105,000 Calif. |
| 1995-98 | 2.2L 4-Cyl. | T254 | 60,000 Federal 105,000 Calif. |
| 1999-01 | 2.2L 4-Cyl. (SOHC) | T304 | 105,000 |
| 1996-97 | 2.5L 4-Cyl. (DOHC) | T277 | 60,000 |
| 1998-99 | 2.5L 4-Cyl. (DOHC) | T277 | 105,000 |
| **Justy** | | | |
| 1987-95 | 1.2L 3-Cyl. | T135 | 60,000 |
| **Legacy & Outback** | | | |
| 1993 | 2.2L 4-Cyl. | T172[3] | 60,000 |
| 1994 | 2.2L 4-Cyl. | T254 | 60,000 |
| 1995-98 | 2.2L 4-Cyl. | T254 | 60,000 Federal 105,000 Calif. |
| 1999-01 | 2.2L 4-Cyl. (SOHC) | T304 | 105,000 |
| 1996-97 | 2.5L 4-Cyl. (DOHC) | T277 | 60,000 |
| 1998-99 | 2.5L 4-Cyl. (DOHC) | T277 | 105,000 |
| 2000-01 | 2.5L 4-Cyl. (SOHC) | T307 | 105,000 |
| **Loyale** | | | |
| 1990-94 | 1.8L 4-Cyl. | | |
| | Right Hand Belt | T300[3] | 52,000[2] |
| | Left Hand Belt | T299[3] | 52,000[2] |
| **RX** | | | |
| 1985-89 | 1.8L 4-Cyl. | | |
| | Right Hand Belt | T300[3] | 52,000[2] |
| | Left Hand Belt | T299[3] | 52,000[2] |
| **Sedan & Station Wagon** | | | |
| 1985-89 | 1.8L 4-Cyl. | | |
| | Right Hand Belt | T300[3] | 52,000[2] |
| | Left Hand Belt | T299[3] | 52,000[2] |
| **SVX** | | | |
| 1992-94 | 3.3L 6-Cyl. | T209 | 60,000 |
| 1995-97 | 3.3L 6-Cyl. | T209 | 60,000 Federal 105,000 Calif. |
| **XT** | | | |
| 1985-91 | 1.8L 4-Cyl. | | |
| | Right Hand Belt | T300[3] | 52,000[2] |
| | Left Hand Belt | T299[3] | 52,000[2] |
| **XT6** | | | |
| 1988-91 | 2.7L 6-Cyl. | | |
| | Right Hand Belt | T150 | 60,000[2] |
| | Left Hand Belt | T151 | 60,000[2] |
| **Light Trucks** | | | |
| **Forester** | | | |
| 1998 | 2.5L 4-Cyl. (DOHC) | T277 | 105,000 |
| 1999-01 | 2.5L 4-Cyl. (SOHC) | T304 | 105,000 |
| **SUZUKI** | | | |
| **Passenger Cars** | | | |
| **Esteem** | | | |
| 1995-00 | 1.6L 4-Cyl. | T212 | 60,000 |
| **Esteem (Canadian)** | | | |
| 2001 | 1.6L 4-Cyl. | T212 | 60,000 |
| **Swift** | | | |
| 1989-92 | *1.3L 4-Cyl. (DOHC) | T171 | 60,000[1] |
| 1993-94 | *1.3L 4-Cyl. (DOHC) | T171 | 60,000 |
| 1989-92 | 1.3L 4-Cyl. (SOHC) | T095 | 60,000[1] |
| **SUZUKI (Cont.)** | | | |
| **Swift (continued)** | | | |
| 1993 | 1.3L 4-Cyl. (SOHC) | T095 | 60,000 |
| 1994 | 1.3L 4-Cyl. (SOHC) | T243 | 60,000 |
| 1995-97 | 1.3L 4-Cyl. (SOHC) | T272 | 60,000 |
| 1998-01 | 1.3L 4-Cyl. (SOHC) | T194[3] | 60,000 |
| **Light Trucks** | | | |
| **Samurai** | | | |
| 1985-92 | 1.3L 4-Cyl. (SOHC) | T095 | 60,000[1] |
| 1993 | 1.3L 4-Cyl. (SOHC) | T095 | 60,000 |
| 1994 | 1.3L 4-Cyl. (SOHC) | | |
| | VIN R4100375 & Earlier | T095 | 60,000 |
| | From VIN R4100376 | T243 | 60,000 |
| 1995 | 1.3L 4-Cyl. | T243 | 60,000 |
| **Sidekick** | | | |
| 1989 | 1.3L 4-Cyl. (SOHC) | T095 | 60,000[1] |
| 1989-91 | 1.6L 4-Cyl. | T164 | 60,000[1] |
| 1992 | 1.6L 4-Cyl. | | |
| | Convertible | T164 | 60,000[1] |
| | Hardtop | T212 | 60,000[1] |
| 1993-95 | 1.6L 4-Cyl. | | |
| | Convertible | T164 | 60,000 |
| | Hardtop | T212 | 60,000 |
| 1996-98 | 1.6L 4-Cyl. | T212 | 60,000 |
| **Vitara** | | | |
| 1999-01 | 1.6L 4-Cyl. | T212 | 60,000 |
| **X-90** | | | |
| 1996-98 | 1.6L 4-Cyl. | T212 | 60,000 |
| **TOYOTA** | | | |
| **Passenger Cars** | | | |
| **Avalon** | | | |
| 1995-97 | 3.0L V6 | T257 | 60,000, Severe |
| 1998-01 | 3.0L V6 | T257 | 90,000 |
| **Camry** | | | |
| 1984-85 | 1.8L 4-Cyl. Diesel | T098 | 60,000 |
| 1983-85 | 2.0L 4-Cyl. | T087[3] | 60,000[1] |
| 1986 | 2.0L 4-Cyl. | T087[3] | 60,000, Severe |
| 1987-91 | 2.0L 4-Cyl. | T199[3] | 60,000, Severe |
| 1992-97 | 2.2L 4-Cyl. | T199[3] | 60,000, Severe |
| 1998-01 | 2.2L 4-Cyl. | T199[3] | 90,000 |
| 1988-91 | 2.5L V6 | T157 | 60,000, Severe |
| 1992-93 | 3.0L V6 | T200 | 60,000, Severe |
| 1995-97 | 3.0L V6 | T257 | 60,000, Severe |
| 1998-01 | 3.0L V6 | T257 | 90,000 |
| **Camry Solara** | | | |
| 1999-01 | 2.2L 4-Cyl. | T199[3] | 90,000 |
| 1998-01 | 3.0L V6 | T257 | 90,000 |
| **Celica, Celica GT & ST** | | | |
| 1990-92 | 1.6L 4-Cyl. (DOHC, 4A-F) | T036[3] | 60,000, Severe |
| 1993 | 1.6L 4-Cyl. (DOHC, 4A-F) | T239 | 60,000, Severe |
| 1994-97 | 1.8L 4-Cyl. (7A-FE) | T235 | 60,000, Severe |
| 1986 | 2.0L 4-Cyl. | T087[3] | 60,000, Severe |
| 1987-89 | 2.0L 4-Cyl. | T199[3] | 60,000, Severe |
| 1990-93 | 2.0L 4-Cyl. | T125 | 60,000, Severe |
| 1990-97 | 2.2L 4-Cyl. | T199[3] | 60,000, Severe |
| 1998-01 | 2.2L 4-Cyl. | T199[3] | 90,000 |
| **Celica GTS** | | | |
| 1986-88 | 2.0L 4-Cyl. | T125 | 60,000, Severe |
| 1990-93 | 2.2L 4-Cyl. | T199[3] | 60,000, Severe |
| **Celica Supra** | | | |
| 1982-83 | 2.8L 6-Cyl. | T074 | 60,000, Severe |
| 1984-86 | 2.8L 6-Cyl. | T101 | 60,000, Severe |
| **Corolla** | | | |
| 1983-85 | 1.6L 4-Cyl. (SOHC) | T070[3] | 60,000[1] |

* - Interference Engine. Other interference engine applications may exist which are not listed here. See page 19 for interference engine cautions.

[1] - Although the vehicle manufacturer does not recommend a specific scheduled maintenance interval, belt manufacturers suggest the belt be replaced at 60,000 miles intervals.

[2] - The vehicle manufacturer recommends replacing all belts at the same time.

[3] - A timing belt component kit is available for this application.

# Timing Belt Replacement Recommendations

| Make/ Model Year | Engine | Belt Part No. | Recommended Replacement (Miles) |
|---|---|---|---|
| **TOYOTA (Cont.)** | | | |
| **Corolla (continued)** | | | |
| 1986-88 | 1.6L 4-Cyl. (SOHC) | T070[3] | 60,000, Severe |
| 1988-92 | 1.6L 4-Cyl. (DOHC, 4A-F) | T036[3] | 60,000, Severe |
| 1993-97 | 1.6L 4-Cyl. (DOHC, 4A-F) | T236[3] | 60,000, Severe |
| 1984-85 | 1.8L 4-Cyl. Diesel | T098 | 60,000 |
| 1993-97 | 1.8L 4-Cyl. (7A-FE) | T235 | 60,000, Severe |
| **Corolla FX & FX-16** | | | |
| 1986-88 | 1.6L 4-Cyl. | T070[3] | 60,000, Severe |
| 1985 | 1.6L 4-Cyl. (4A-GE) | T112 | 60,000[1] |
| 1986-88 | 1.6L 4-Cyl. (4A-GE) | T112 | 60,000, Severe |
| **Corolla GTS** | | | |
| 1989-91 | 1.6L 4-Cyl. (4A-GE/GELC) | T176 | 60,000, Severe |
| **Corolla SR5** | | | |
| 1985 | 1.6L 4-Cyl. | T070[3] | 60,000[1] |
| 1986-88 | 1.6L 4-Cyl. | T070[3] | 60,000, Severe |
| **Corolla Tercel** | | | |
| 1980-82 | 1.5L 4-Cyl. | T070[3] | 60,000[1] |
| **Cressida** | | | |
| 1983 | 2.8L 6-Cyl. | T074 | 60,000, Severe |
| 1984-88 | 2.8L 6-Cyl. | T101 | 60,000, Severe |
| 1989-91 | 3.0L 6-Cyl. | T126 | 60,000, Severe |
| 1992 | 3.0L 6-Cyl. | T237 | 60,000, Severe |
| **MR2** | | | |
| 1985 | 1.6L 4-Cyl. (4A-GE) | T112 | 60,000[1] |
| 1986-88 | 1.6L 4-Cyl. (4A-GE) | T112 | 60,000, Severe |
| 1989 | 1.6L 4-Cyl. (4A-GE) | T176 | 60,000, Severe |
| 1991-95 | 2.0L 4-Cyl. | T125 | 60,000, Severe |
| 1991-95 | 2.2L 4-Cyl. | T199[3] | 60,000, Severe |
| **Paseo** | | | |
| 1992-97 | 1.5L 4-Cyl. (5E-FE) | T208 | 60,000, Severe |
| 1998 | 1.5L 4-Cyl. (5E-FE) | T208 | 90,000, Severe |
| 1999 | 1.5L 4-Cyl. (5E-FE) | T208 | 90,000 |
| **Supra** | | | |
| 1986-90 | 3.0L 6-Cyl. (7M-GE) | T126 | 60,000, Severe |
| 1991-92 | 3.0L 6-Cyl. (7M-GE) | T237 | 60,000, Severe |
| 1993-97 | 3.0L 6-Cyl. (2JZ) | T215 | 60,000, Severe |
| 1998 | 3.0L 6-Cyl. (2JZ) | T215 | 90,000, Severe |
| **Tercel** | | | |
| 1983-86 | 1.5L 4-Cyl. (3A-C)) | T070[3] | 60,000[1] |
| 1987 | 1.5L 4-Cyl. (Sedan, 3E) | T136 | 60,000, Severe |
| 1988-94 | 1.5L 4-Cyl. (3E) | T233[3] | 60,000, Severe |
| 1995-97 | 1.5L 4-Cyl. (5E-FE) | T208 | 60,000, Severe |
| 1998 | 1.5L 4-Cyl. (5E-FE) | T208 | 90,000, Severe |
| 1999 | 1.5L 4-Cyl. (5E-FE) | T208 | 90,000 |
| **Tercel Wagon** | | | |
| 1987-88 | 1.5L 4-Cyl. (3A-C) | T070[3] | 60,000, Severe |
| **Light Trucks** | | | |
| **Highlander** | | | |
| 2001 | 3.0L V6 | T257 | 90,000 |
| **Land Cruiser** | | | |
| 1998-01 | *4.7L V8 | T298 | 90,000 |
| **Pickup** | | | |
| 1981 | *2.2L 4-Cyl. Diesel | T079 | 100,000 |
| 1982 | 2.2L 4-Cyl. Diesel | | |
| | *Up To May 31 | T079 | 100,000 |
| | *From June 1 | T084 | 100,000 |
| 1983 | *2.2L 4-Cyl. Diesel | T084 | 100,000 |
| 1984-87 | *2.4L 4-Cyl. Diesel | T084 | 100,000 |
| 1988-92 | 3.0L V6 (3V-ZE) | T154 | 60,000, Severe |
| 1993-95 | 3.0L V6 (3V-ZE) | T240 | 60,000, Severe |
| **RAV4** | | | |
| 1996-97 | 2.0L 4-Cyl. | T199 | 60,000, Severe |
| 1998 | 2.0L 4-Cyl. | T199 | 90,000, Severe |
| 1999-00 | 2.0L 4-Cyl. | T199 | 90,000 |
| **TOYOTA (Cont.)** | | | |
| **Sienna** | | | |
| 1998-01 | 3.0L V6 | T257 | 90,000 |
| **Tacoma** | | | |
| 1995-97 | 3.4L V6 | T271 | 60,000, Severe |
| 1999-01 | 3.4L V6 | T271 | 90,000 |
| **Tundra** | | | |
| 2000-01 | 3.4L V6 | T271 | 90,000 |
| 2000-01 | *4.7L V8 | T298 | 90,000 |
| **T100** | | | |
| 1995-97 | 3.4L V6 | T271 | 60,000, Severe |
| 1998 | 3.4L V6 | T271 | 90,000 |
| **4Runner** | | | |
| 1988-92 | 3.0L V6 (3V-ZE) | T154 | 60,000, Severe |
| 1993-95 | 3.0L V6 (3V-ZE) | T240 | 60,000, Severe |
| 1996-97 | 3.4L V6 | T271 | 60,000, Severe |
| 1999-01 | 3.4L V6 | T271 | 90,000 |
| **VOLKSWAGEN** | | | |
| **Passenger Cars** | | | |
| **Beetle (New Beetle)** | | | |
| 1999-01 | *1.8L 4-Cyl. (APH & AWV) | T306 | 105,000 |
| 1998-00 | *2.0L 4-Cyl. (AEG) | T296 | 60,000[1] |
| 2001 | *2.0L 4-Cyl. (AEG) | T296 | 105,000 |
| 1998-01 | *1.9L 4-Cyl. Diesel (ALH) | T301 | 60,000 (Man. Trans.) 40,000 (Auto. Trans.) |
| **Cabrio** | | | |
| 1995-01 | *2.0L 4-Cyl. (ABA) | T262 | 60,000[1] |
| 1999 | *2.0L 4-Cyl. (AEG) | T296 | 60,000[1] |
| **Cabriolet** | | | |
| 1985-89 | *1.8L 4-Cyl. (DOHC) | T292 | 60,000[1] |
| 1985-93 | 1.8L 4-Cyl. (SOHC) | T017[3] | 60,000[1] |
| **Corrado** | | | |
| 1990-92 | 1.8L 4-Cyl. (SOHC) | T017[3] | 60,000[1] |
| **Dasher** | | | |
| 1974-75 | 1.5L 4-Cyl. | T017[3] | 60,000[1] |
| 1979-80 | *1.5L 4-Cyl. Diesel | T043 | 60,000[1] |
| 1976-80 | 1.6L 4-Cyl. | T017[3] | 60,000[1] |
| 1981 | *1.6L 4-Cyl. Diesel | T043 | 60,000[1] |
| **Fox** | | | |
| 1987-93 | 1.8L 4-Cyl. (SOHC) | T017[3] | 60,000[1] |
| **Golf** | | | |
| 1985-87 | *1.6L 4-Cyl. Diesel | T043 | 60,000[1] |
| 1985-89 | *1.8L 4-Cyl. (DOHC) | T292 | 60,000[1] |
| 1985-92 | 1.8L 4-Cyl. (SOHC) | T017[3] | 60,000[1] |
| 1993-96 | 1.9L 4-Cyl. Diesel | | |
| | *AAZ, AHU & 1Z Engines | T242 | 60,000 |
| 1999-01 | *1.9L 4-Cyl. Diesel (ALH) | T301 | 60,000 (Man. Trans.) 40,000 (Auto. Trans.) |
| 1993-99 | *2.0L 4-Cyl. (ABA) | T262 | 60,000[1] |
| 1999 | *2.0L 4-Cyl. (AEG) | T296 | 60,000[1] |
| 2000 | *2.0L 4-Cyl. (AEG) | T296 | 60,000[1] |
| **Golf (Canadian)** | | | |
| 1988-92 | *1.6L 4-Cyl. Diesel | T043 | 60,000[1] |
| 1993-95 | 1.8L 4-Cyl. (SOHC) | T017[3] | 60,000[1] |
| 1995 | *2.0L 4-Cyl. (ABA) | T262 | 60,000[1] |
| **GTI** | | | |
| 1985-89 | *1.8L 4-Cyl. (DOHC) | T292 | 60,000[1] |
| 1985-92 | 1.8L 4-Cyl. (SOHC) | T017[3] | 60,000[1] |
| 1990-92 | *2.0L 4-Cyl. (DOHC) | T292 | 60,000[1] |
| 1996-99 | *2.0L 4-Cyl. (ABA) | T262 | 60,000[1] |
| 1999 | *2.0L 4-Cyl. (AEG) | T296 | 60,000[1] |
| **GTI (Canadian)** | | | |
| 1993-95 | *2.0L 4-Cyl. (ABA) | T262 | 60,000[1] |

* - Interference Engine. Other interference engine applications may exist which are not listed here. See page 19 for interference engine cautions.

[1] - Although the vehicle manufacturer does not recommend a specific scheduled maintenance interval, belt manufacturers suggest the belt be replaced at 60,000 miles intervals.

[2] - The vehicle manufacturer recommends replacing all belts at the same time.

[3] - A timing belt component kit is available for this application.

# Timing Belt Replacement Recommendations

| Make/ Model Year | Engine | Belt Part No. | Recommended Replacement (Miles) |
|---|---|---|---|
| **VOLKSWAGEN (Cont.)** | | | |
| **Jetta** | | | |
| 1980 | 1.6L 4-Cyl. | T017[3] | 60,000[1] |
| 1981-86 | *1.6L 4-Cyl. Diesel | T043 | 60,000[1] |
| 1989-92 | *1.6L 4-Cyl. Diesel | T043 | 60,000[1] |
| 1981-84 | 1.7L 4-Cyl. | T017[3] | 60,000[1] |
| 1985-89 | *1.8L 4-Cyl. (DOHC) | T292 | 60,000[1] |
| 1984-92 | 1.8L 4-Cyl. (SOHC) | T017[3] | 60,000[1] |
| 1993-98 | 1.9L 4-Cyl. Diesel | | |
| | *AAZ, AHU & 1Z Engines | T242 | 60,000 |
| 1999-01 | *1.9L 4-Cyl. Diesel (ALH) | T301 | 60,000 (Man. Trans.) 40,000 (Auto. Trans.) |
| 1990-92 | *2.0L 4-Cyl. (DOHC) | T292 | 60,000[1] |
| 1993-99 | *2.0L 4-Cyl. (ABA) | T262 | 60,000[1] |
| 1999-00 | *2.0L 4-Cyl. (AEG) | T296 | 60,000[1] |
| **Jetta (Canadian)** | | | |
| 1993-95 | 1.8L 4-Cyl. (SOHC) | T017[3] | 60,000[1] |
| **Passat** | | | |
| 1998-99 | 1.8L 4-Cyl. (AEB & ATW) | | |
| | *152 Tooth Belt | T291 | 90,000 |
| | *153 Tooth Belt | T317 | 90,000 |
| 2000-01 | *1.8L 4-Cyl. (AUG & AWM) | | |
| | *152 Tooth Belt | T291 | 105,000 |
| | *153 Tooth Belt | T317 | 105,000 |
| 1990-92 | *2.0L 4-Cyl. (DOHC) | T292 | 60,000[1] |
| 1993-96 | *2.0L 4-Cyl. (ABA) | T262 | 60,000[1] |
| 1998 | *2.8L V6 | T297 | 90,000 |
| 1999 | *2.8L V6 | T297 | 75,000 |
| 2000-01 | *2.8L V6 | T297 | 105,000 |
| **Passat (Canadian)** | | | |
| 1992-94 | 1.8L 4-Cyl. (SOHC) | T017[3] | 60,000[1] |
| **Quantum** | | | |
| 1982-86 | *1.6L 4-Cyl. Diesel | T043 | 60,000[1] |
| 1982-83 | 1.7L 4-Cyl. | T017[3] | 60,000[1] |
| 1985 | 1.8L 4-Cyl. (SOHC) | T017[3] | 60,000[1] |
| 1984-85 | 2.1L 5-Cyl. | | |
| | .70" Belt Width | T127 | 60,000[1] |
| | .75" Belt Width | T065 | 60,000[1] |
| 1983-86 | 2.2L 5-Cyl. | | |
| | .70" Belt Width | T127 | 60,000[1] |
| | .75" Belt Width | T065 | 60,000[1] |
| 1987-88 | 2.2L 5-Cyl. | T127 | 60,000[1] |
| **Rabbit** | | | |
| 1975-79 | 1.5L 4-Cyl. | T017[3] | 60,000[1] |
| 1977-80 | *1.5L 4-Cyl. Diesel | T043 | 60,000[1] |
| 1980 | 1.6L 4-Cyl. | T017[3] | 60,000[1] |
| 1981-84 | *1.6L 4-Cyl. Diesel | T043 | 60,000[1] |
| 1981-84 | 1.7L 4-Cyl. | T017[3] | 60,000[1] |
| 1983-84 | 1.8L 4-Cyl. (SOHC) | T017[3] | 60,000[1] |
| **Scirocco** | | | |
| 1978 | 1.5L 4-Cyl. | T017[3] | 60,000[1] |
| 1976-80 | 1.6L 4-Cyl. | T017[3] | 60,000[1] |
| 1981-83 | 1.7L 4-Cyl. | T017[3] | 60,000[1] |
| 1985-89 | *1.8L 4-Cyl. (DOHC) | T292 | 60,000[1] |
| 1983-89 | 1.8L 4-Cyl. (SOHC) | T017[3] | 60,000[1] |
| **Light Trucks** | | | |
| **Pickup & Rabbit Pickup** | | | |
| 1980 | *1.5L 4-Cyl. Diesel | T043 | 60,000[1] |
| 1980 | 1.6L 4-Cyl. | T017[3] | 60,000[1] |
| 1981-83 | *1.6L 4-Cyl. Diesel | T043 | 60,000[1] |
| 1981-83 | 1.7L 4-Cyl. | T017[3] | 60,000[1] |
| **Vanagon** | | | |
| 1982 | *1.6L 4-Cyl. Diesel | T043 | 60,000[1] |

| Make/ Model Year | Engine | Belt Part No. | Recommended Replacement (Miles) |
|---|---|---|---|
| **VOLVO** | | | |
| **C70, S70 & V70** | | | |
| 1998 | 2.3L 5-Cyl. | | |
| | *To Eng. VIN 1266127 | T252 | 70,000 |
| | *From Eng. VIN 1266128 | T311 | 70,000 |
| 1999-01 | 2.3L 5-Cyl. | | |
| | *To Eng. VIN 1266127 | T252 | 105,000 |
| | *From Eng. VIN 1266128 | T311 | 105,000 |
| 1998 | 2.4L 5-Cyl. | | |
| | *To Eng. VIN 1266127 | T252 | 70,000 |
| | *From Eng. VIN 1266128 | T311 | 70,000 |
| 1999-01 | 2.4L 5-Cyl. | | |
| | *To Eng. VIN 1266127 | T252 | 105,000 |
| | *From Eng. VIN 1266128 | T311 | 105,000 |
| **Coupe** | | | |
| 1991 | *2.3L 4-Cyl. | T032[3] | 50,000 |
| **DL & GL** | | | |
| 1980-83 | *2.1L 4-Cyl. | T032[3] | 40,000 |
| 1982-85 | *2.3L 4-Cyl. | T032[3] | 40,000 |
| 1980-84 | 2.4L 6-Cyl. Diesel | | |
| | *Camshaft | T083 | 75,000[2] |
| | *Injection Pump | T082 | 75,000[2] |
| **GLE (Canadian)** | | | |
| 1984 | *2.1L 4-Cyl. | T032[3] | 40,000 |
| **GLT** | | | |
| 1981-83 | *2.1L 4-Cyl. | T032[3] | 40,000 |
| **GLT (Canadian)** | | | |
| 1983 | *2.3L 4-Cyl. | T032[3] | 40,000 |
| **GT Turbo** | | | |
| 1984-85 | *2.1L 4-Cyl. | T032[3] | 40,000 |
| **S40 & V40** | | | |
| 2000-01 | 1.9L 4-Cyl. Turbo | | |
| | *Up Eng. VIN 1219110 | T252 | 105,000 |
| | *From Eng. VIN 1219111 | T311 | 105,000 |
| **S60** | | | |
| 2001 | 2.3L 5-Cyl. | | |
| | *To Eng. VIN 1266127 | T252 | 105,000 |
| | *From Eng. VIN 1266128 | T311 | 105,000 |
| 2001 | 2.4L 5-Cyl. | | |
| | *To Eng. VIN 1266127 | T252 | 105,000 |
| | *From Eng. VIN 1266128 | T311 | 105,000 |
| **S90 & V90** | | | |
| 1997-98 | *2.9L 6-Cyl. | T270 | 70,000 |
| **240** | | | |
| 1986-92 | *2.3L 4-Cyl. | T032[3] | 50,000 |
| 1993 | *2.3L 4-Cyl. | T234 | 50,000 |
| **242, 244 & 245** | | | |
| 1976-79 | *2.1L 4-Cyl. | T032[3] | 40,000 |
| **740** | | | |
| 1986-92 | *2.3L 4-Cyl. | T032[3] | 50,000 |
| 1985-86 | 2.4L 6-Cyl. Diesel | | |
| | *Camshaft | T083 | 75,000[2] |
| | *Injection Pump | T082 | 75,000[2] |
| **740 (Canadian)** | | | |
| 1986-88 | 2.3L 4-Cyl. (B234, DOHC) | | |
| | *Balance Shaft | T174 | 50,000[2] |
| | *Camshaft | T173 | 50,000[2] |
| 1989 | 2.3L 4-Cyl. (B234, DOHC) | | |
| | Automatic Tensioner | | |
| | *Balance Shaft | T174 | 50,000[2] |
| | *Camshaft | T198 | 50,000[2] |
| | Manual Tensioner | | |
| | *Balance Shaft | T174 | 50,000[2] |
| | *Camshaft | T173 | 50,000[2] |

* - Interference Engine. Other interference engine applications may exist which are not listed here. See page 19 for interference engine cautions.

[1] - Although the vehicle manufacturer does not recommend a specific scheduled maintenance interval, belt manufacturers suggest the belt be replaced at 60,000 miles intervals.

[2] - The vehicle manufacturer recommends replacing all belts at the same time.

[3] - A timing belt component kit is available for this application.

# Timing Belt Replacement Recommendations

| Make/ Model Year | Engine | Belt Part No. | Recommended Replacement (Miles) |
|---|---|---|---|
| **VOLVO (Cont.)** | | | |
| **740 (Canadian) (continued)** | | | |
| 1990 | 2.3L 4-Cyl. (B234, DOHC) | | |
| | *Balance Shaft | T174 | 50,000[2] |
| | *Camshaft | T173 | 50,000[2] |
| **760** | | | |
| 1985-90 | *2.3L 4-Cyl. | T032[3] | 50,000 |
| 1985 | 2.4L 6-Cyl. Diesel | | |
| | *Camshaft | T083 | 75,000[2] |
| | *Injection Pump | T082 | 75,000[2] |
| **760 GLE** | | | |
| 1984 | *2.3L 4-Cyl. | T032[3] | 40,000 |
| 1983-84 | 2.4L 6-Cyl. Diesel | | |
| | *Camshaft | T083 | 75,000[2] |
| | *Injection Pump | T082 | 75,000[2] |
| **780** | | | |
| 198-90 | *2.3L 4-Cyl. | T032[3] | 50,000 |
| **850** | | | |
| 1994 | 2.3L 5-Cyl. Turbo | | |
| | *Up To Eng. No. 131034 | T217 | 50,000 |
| | *From Eng. No. 131035 | T252 | 70,000 |
| 1995-97 | *2.3L 5-Cyl. Turbo | T252 | 70,000 |
| 1993 | 2.4L 5-Cyl. Turbo | | |
| | *Up To Eng. No. 131034 | T217 | 50,000 |
| | *From Eng. No. 131035 | T252 | 70,000 |
| 1994-97 | *2.4L 5-Cyl. Turbo | T252 | 70,000 |
| **850 (Canadian)** | | | |
| 1996 | *2.3L 5-Cyl. Turbo | T252 | 70,000 |
| 1995 | 2.4L 5-Cyl. Turbo | | |
| | *Up To Eng. No. 131034 | T217 | 70,000 |
| | *From Eng. No. 131035 | T269 | 70,000 |
| **940** | | | |
| 1991-92 | *2.3L 4-Cyl. | T032[3] | 50,000 |
| 1993 | *2.3L 4-Cyl. | T234 | 50,000 |
| 1994-95 | *2.3L 4-Cyl. (B230FT) | T234 | 50,000 w/o EGR<br>100,000 w/ EGR |
| **940 (Canadian)** | | | |
| 1991-92 | 2.3L 4-Cyl. (B234, DOHC) | | |
| | *Balance Shaft | T174 | 50,000[2] |
| | *Camshaft | T198 | 50,000[2] |
| **960** | | | |
| 1992 | *2.9L 6-Cyl. | T217 | 30,000 |
| 1993 | *2.9L 6-Cyl. | T252 | 50,000 |
| 1994 | *2.9L 6-Cyl. | T252 | 50,000 |
| 1995-97 | *2.9L 6-Cyl. | T270 | 70,000 |
| **YUGO** | | | |
| **GV Series** | | | |
| 1986-89 | *1.1L 4-Cyl. | T018 | 60,000[1] |
| 1987 | *1.3L 4-Cyl. | T018 | 60,000[1] |

* - Interference Engine. Other interference engine applications may exist which are not listed here. See page 19 for interference engine cautions.

[1] - Although the vehicle manufacturer does not recommend a specific scheduled maintenance interval, belt manufacturers suggest the belt be replaced at 60,000 miles intervals.

[2] - The vehicle manufacturer recommends replacing all belts at the same time.

[3] - A timing belt component kit is available for this application.

# *Free Running or Interference? You and Your Customers Need to Know.*

Automobile engines can be classified as either Free-Running or Interference, depending on what occurs if piston/valve synchronization is lost.

As illustrated below, in the free-running engine with the crankshaft still moving, there is enough clearance between the valve and piston, even if the cam stops with a valve fully open.

**Free Running**
**No Valve/Piston Interference**

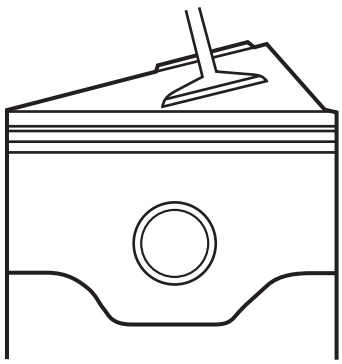

**Interference**
**Valve/Piston Interference**

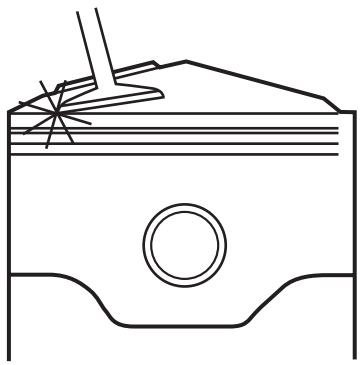

However, interference engines usually sustain damage if synchronization is lost. As illustrated, disrupted synchronization allows the piston and valve to collide causing damage and very expensive repairs for the vehicle owner. Damage can occur to valves, pistons, or heads, and in some cases, completely ruin the engine. Most imports (with higher compression engines) and most car and light truck diesel engines are interference. To avoid costly engine repairs, follow the auto manufacturers' mileage replacement recommendations or we recommend timing belt replacement at around 60,000 miles.

**NOTE: For your convenience, interference engines have been footnoted with a star in the application listings of this publication. This lets you easily identify them…and pass that information on to your customers.**

Since timing belts are inside the engine they tend to be an out-of-sight, out-of-mind item and are seldom thought of as a part of routine maintenance. Here are some questions to ask customers that will help sell belts and protect the customer from expensive repairs:

1. Did you buy the car new? If yes, they'll know if the belt has ever been replaced.

2. Did you buy the car used? If so, they won't know if the belt has been replaced. This is a flag for the customer to get the belt checked, replaced or at least be aware that he has a timing belt.

3. How many miles are on the vehicle? Generally belts should be replaced at around 60,000 miles or less. Our Timing Belt Replacement Recommendations Booklet is an excellent tool for determining replacement intervals.

4. Have you ever replaced the timing belt? If the answer is yes or no (and the customer knows the mileage) you can determine where the vehicle is in the replacement cycle.

Here's a helpful hint for customers with vehicles within a few thousand miles of the recommended replacement interval. If they are having any engine repair done, have the timing belt checked. If it needs replacing, do it along with the other repairs and save time and money.